Sargent-Rayment Infradynes

A Vintage Radio MONOGRAPH

by

D. H. MOORE

The Editorial Group, Ltd...

P.O. BOX 521 • PALO ALTO, CALIFORNIA

All rights reserved. No part of this work, the text or illustrations, may be reproduced or in any form transmitted in any form or means, electronic or mechanical, including photo-copy.

© D.H.MOORE, 1954/1985

DEDICATION

...to a way of life -
that should not have
been forgotten.

Autographed Edition

It is my sincerest wish that this latest contribution of my vintage radio writings may afford you as much enjoyment and usefulness as I've had in compiling it.

Over to you, and 73,

Palo Alto

Acknowledgements

Bits and pieces of the material contained in these volumes have been published, referenced, or reviewed in divers media over the years, and where a prior copyright existed, my thanks to the publishers for relinquishment, especially foreign publishers. They all seem to have understood and shared in the inherent fraternalism of a labour of love, which is appreciated.

Thanks should also be given Stan Lopes of Concord, California, who patiently gave all original volumes a deft technical-edit of the authenticity of the circuits depicted. His efforts obviously have resulted in more useful books. He even found errors in original sources!

Thanks are also due to Charlie Rhodes of South Salem, New York, for his spotting a few fundamental errors in Volume VIII, which deals with the period of 1910 through 1924 - a period that actually holds little interest for me, but which apparently does for others, and that volume was created for them. Charlie's familiarity with circuitry of the period was a boon to the over-all effort.

Special thanks must go to D.G.Yule of Mountain View, California, who sponsored the original effort as a contribution to the hobby, and to Howard W. Granoff of Silver Spring, Maryland, whose unflagging effots to promote awareness of the Sketch-Books and Monographs has done much towards their current popularity and general acceptance.

And in as much as fraternalism is the basis for any shared special enthusiasm, which is what any hobby is, these Sketch-Books and Monographs in that traditional spirit.

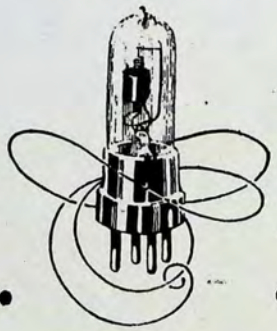

CONTENTS

Frontispiece

Introduction..... 1
SARGENT's First Contribution,1923 4

The First "INFRADYNE", 1926..... 5
Early Breadboard Layouts..... 6
Pictorial Diagram..... 7
1st Version Schematic..... 8
2nd Version Schematic..... 9
Panel Drilling Pattern..... 10
Oscillator Coil Data..... 11
Original Parts List..... 12
Make-Ready Procedures..... 13
Alignment..... 13
Operating Instructions..... 42

The #700 "INFRADYNE" Amplifier... 15
Interior Bottom View..... 16
Schematic..... 16
Check-Out Procedures..... 17
Continuity Check..... 17
Secondary Circuit Check.... 17
Connecting To Receiver..... 17
Notes..... 18
Adjustments..... 18

The "INFRADYNE" Adapter..... 20
The Sargent Adapter, 1926..... 21
Adapting To Any TRF..... 22
Fitch's Adapter, 1926..... 23
Commercial Adaptations..... 24
Kolster..... 24
Atwater-Kent..... 24

Original "INFRADYNE" Modification 27

"DeLuxe INFRADYNE", 1927..... 29
1st Version Schematic..... 30
2nd Version Schematic..... 31
Oscillator & #700 Hook-Up..... 32

Remler's "INFRADYNE 28"..... 33
1st Schematic..... 35
2nd Version Schematic..... 36
#710 RF Amplifier..... 37
Plan and Bottom Views..... 38
Operating Instructions..... 39
Special Oscillator Circuit... 40

Remler AF Amplifier System, 1928 41

Remler "Unitone Symphonic", 1928 43

"INFRADYNE 29" 2nd Version Mods. 44

Remler 45 KC Super-Het, 1928.... 45
1st Version Schematic..... 46
2nd Version Schematic..... 47
Panel Drilling Pattern..... 48
Bottom View..... 48
Parts List..... 48
Operating Instructions..... 49
Best's 45 KC Super-Het, 1926. 50
Schematic..... 51
Parts List & Notes..... 52
Best's Second 45 KC Set... 55
Remler 45 KC Notations..... 53

Remler RF Transformer Connexions 54

CRCB Version of Remler 45 KC Set 56

Remler Screen-Grid 29..... 58
Simplified Wiring Diagram.... 60
General Notes..... 60
Schematic..... 61

Remler 28 Power Compact..... 62
1st Version Cuts..... 63
2nd Version Cuts..... 63
1st Version Schematic..... 64
2nd Version Schematic..... 65
3rd Version Schematic..... 66

Incorporating An "Autoformer"... 67

A Form of Flattery...?..... 68

Remler Power Amplifier K-111.... 69

SARGENT-RAYMENT SIX, 1929..... 70

SARGENT-RAYMENT SEVEN, 1929..... 71
Pictorial Cuts..... 71
Schematic..... 72
Parts List & Notes..... 73
Anti-Motor-Boating Device..... 74

Remler AC Compact Super-Het, 1928 75
Schematic..... 76
Power Supply Pictorial..... 77

Remler "111" BC Receiver, 1929... 78
Schematic..... 79
"111" Power Amplifier..... 80
Coupling To three Speakers.... 81

Remler Component Sketches..... 82

SARGENT-RAYMENT "Station-Isolator 84

SARGENT Early Regeneration Designs 85

SARGENT "DX-Ranger", 1932..... 87

SARGENT 9-33 All-Wave Receiver... 89

SARGENT Regen. Pre-Selector, 1934. 91

SARGENT Communications Receiver.. 93

* * *
* *
*

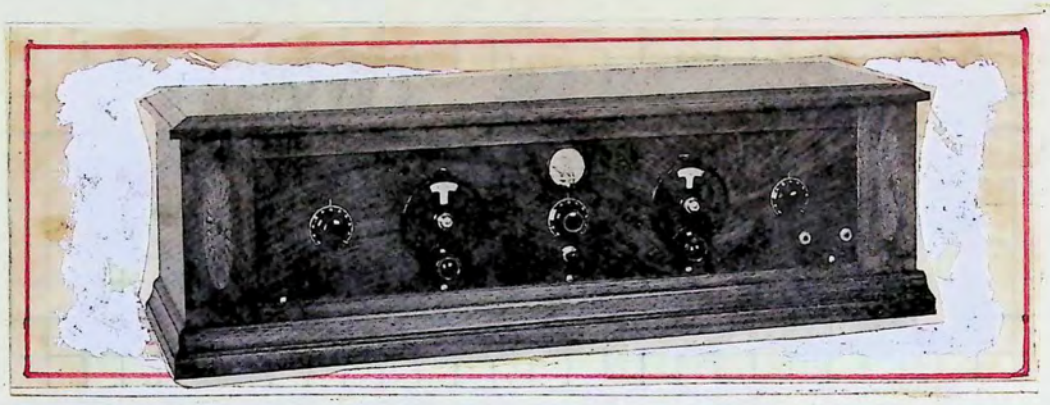

INFRA-DYNE

TRADE MARK

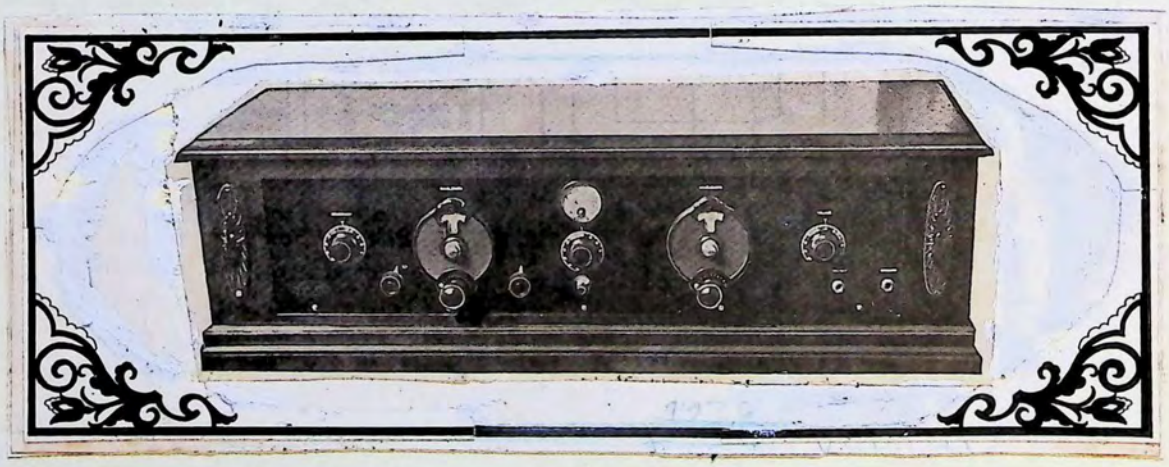

1926

INFRA-DYNE

Several of our early pioneers were quite jealous of their "contributions" to the infant art of Radio, and would not hesitate a second to frenetically rush out and patent whatever idea that came to them. Names which come easily to mind would be Grimes, Lynch, Frost, Bernard. On the other hand, men such as Flewelling or Lacault would casually share their ideas, in print or at meetings. There were, in other words, very few genuine contributors, although there were a couple of highly successful partnerships.

Among those was that of E.M.Sargent and L.C.Rayment, there in Oakland, California. They were responsible for one of the better popular circuits of the mid-Twenties - the "INFRADYNE", a circuit that was refined through five years. And while Lacault refined that famous Modulation Theory imported from France and produced the very impressive ULTRADYNES and STROBODYNES during the same period, E.M. Sargent went looking for a practical use for sum frequencies. Just how successful he was was attested to by the popularity of not only the INFRADYNE circuitry, but the commercial application of his discoveries by such as REMLER, ATWATER-KENT, KOLSTER, among others.

The idea was as follows:

When an incoming signal is mixed with a locally generated oscillating circuit, two new frequencies are generated, known as the beat frequency, a phenomenon utilised in all super-heterodynes. But the use of sum frequencies, the heart of the INFRADYNE circuits, had been ignored by radio engineers in the mistaken belief that when the frequencies were on the order of 3,200 KC or higher, they could not be efficiently amplified. After an alleged 200 experiments, Sargent and Rayment proved them wrong.

The use of sum frequencies did not improve the fidelity of reproduction, but it did enhance the inherent sensitivity of the set in which it was used, as well as greatly reducing background noises. The use of sum frequencies also permitted but one oscillator setting for any one station - no mean feat in those days.

While radio historians have always been a bit vague about a

definite statement on the ambiguous relationship between Sargent and Rayment, Cunningham and REMLER, and Grey & Danielson, it can be said that the first INFRADYNE was unveiled by Sargent in 1926, along with the first #700 INFRADYNE AMPLIFIER (there were two versions). About the time of the third version of the set, itself, it was offered as a kit, at $180, by REMLER. Needless to say, that version contained a wealth of REMLER parts.

In the following pages you will find all versions of INFRADYNE circuitry, together with all technical data on the Amplifier in both versions, and the year-later #710 RF AMPLIFIER. Constructional details, operating procedures, and adjustments are also detailed for those who wish to construct an INFRADYNE (and I heartily endorse the idea), or restore one they already have at hand. Either would be a rewarding experience. You will also find examples of the commercial applications of the #700 unit, as well as a few later REMLER sets.

While you will note that each version of the INFRADYNE went through a variety of similar parts - different manufacturers - basic circuitry remained the same. Any of the parts listed will work quite well between all versions. A good case in point would be the RF coil configurations: the first version employed Thorola's toroidal coils with Camfield binocular coils in the second version, and, eventually the famous 600 series of the REMLER coils in dark blue cases. It is a matter of convenience, on the one hand; and what you have at hand.

By 1928 all of the minor "bugs" had been worked out (there were no major ones) and the INFRADYNE 28 remains my favourite. From then on, AC power, heater-type tubes, and metal chasses were all the rage, and the days of the individualised, personalised "orphan" radio were passing. The INFRADYNE gave way to a REMLER 29 Shield-Grid Six, and the rather elabourate REMLER 45 KC Super-het, which Best tried a hand at "improving" by way of his 115 KC Super-Het, which is also to be found referenced in the following pages.

The Sargent-Rayment Six of 1929 lasted less than a year, as it was followed almost immediately by the SARGENT-RAYMENT SEVEN, and taken over by the Silver-Marshall marketting organisation, which was a mistake, in as much as S-M placed their Shield-Grid Six in direct competition. Sargent remained in Radio after The Crash, with a packaged set he called the DX RANGER, and a little later an all-wave job that was all metal and very heavy. Rayment endured into the Fifties and his last offering, from Oakland, was an FM tuner, Model 610, and while it was a competent unit, it was competing with Fisher and MacIntosh and H.H.Scott, and did not survive.

* * *

E.M.Sargent opened a radio shop in Oakland in 1922, and al-

most immediately began contributing to radio media of the period, offering such things as one and two tube tuners. His first contribution is shown over-leak, 1923. He was even then adverse to shielding. When Rayment joined him in 1923, there began a collaboration that resulted ultimately in the famous "Infradyne" ceries of receiver. Rayment became president and treasurer in 1924, and remained head of the operation for the next two decades.

Prior to the introduction of the "Infradyne", they designed a toroidal coil that was quite popular, as detailed elsewhere herein. I have been unable to learn how and when their association with Gray & Danielson began, but G&D, best known as "Remler", was in business before Sargent-Rayment, offering tuners, coils, amplifiers, panels, and variometers. Also indeterminant is their association with G.M.Best, a technical editor for Pacific Radio - later called "Radio". Best made several worthwhile contributions in the areas of B-eliminators, various "improvements" to existing circuits, and a super-het.

The REMLER 45 KC super-het was an outgrowth of the Infradyne, and Best's version followed. Best then redesigned his jobbie that became known as the Best 115 KC Super-Het, still using Remler parts. In Vol. II-A and IV you will find schematics for Best's efforts. As only the San Francisco Bay seperated the three men, in the days when ferry rides were only a nickel, and because of the inherent fraternalism of the early pioneering cadre, the three men must have gotten together a lot of the time. Still, the Remler Connexion would be interesting.

* * *
* *
*

THEORY OF THE "INFRA+DYNE"

The INFRADYNE is simply another form of the super-het, and its theory of operation is still valid today.

In the super-het, incoming RF current is combined with an RF current of a *different* frequency, generated by the OSC tube. This difference between the two frequencies is made use of, giving a beat-note of around 40,000 cycles per second.

In the INFRADYNE the *sum* of the two frequencies is used, and in the average 5-tube set the beat-note is produced with a frequency of 3,200,000 cycles per second; 94 meters wavelength.

In the super-het the OSC frequency must be *increased* while tuning the set in order to receive higher frequencies, so that the *difference* remains constant. In the INFRADYNE the frequency of the OSC must be *decreased* while tuning the higher frequencies, so that the *sum* remains constant. The OSC dial should have a backward-reading dial - *i.e.*, 100 to 0.

The INFRADYNE amplifier works at a frequency of 3,200 KC.

Stated another way: the received signal is first amplified at radio frequency in the first two stages of the set, then changed to a low wavelength of around 90 meters by the oscillator-mixer; then amplified again by the three stages of the INFRADYNE amplifier. The signal is then detected or demodulated by the DET tube, and finally amplified by the AF stage or stages. In effect, you are simply adding an oscillator-mixer and the INFRADYNE amplifier to a 5-tube TRF.

* * *
* *
*

E.M.SARGENT's FIRST CONTRIBUTION, 1923

Range = 180 to 750 Meters

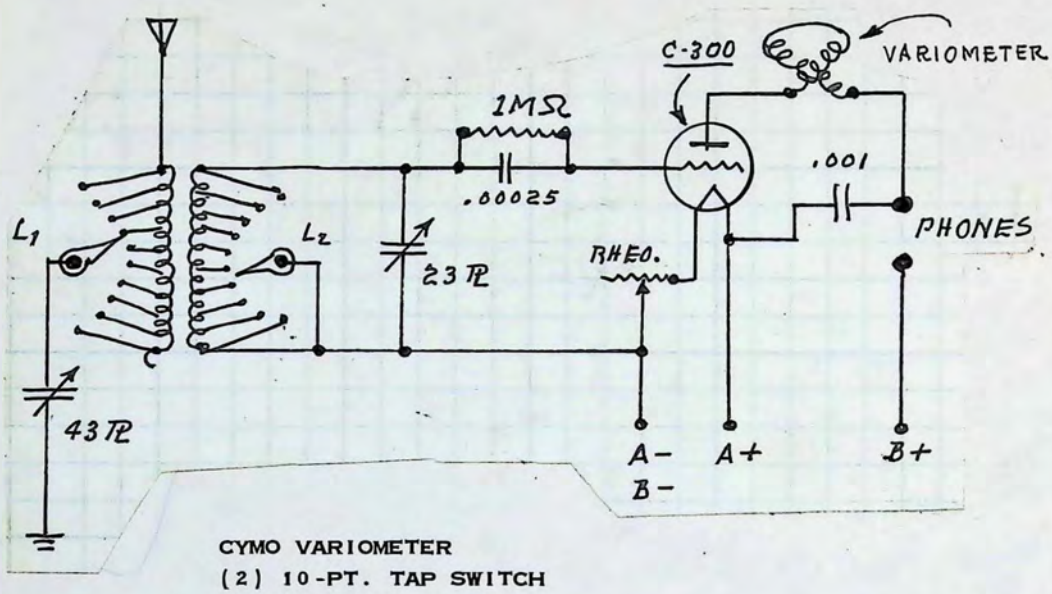

CYMO VARIOMETER
(2) 10-PT. TAP SWITCH
PANEL = 7' X 20.75'
L1 = .5LB. NO. 18 DCC
L2 = .25LB. NO. 28 DSC
NOTE: C-300 TUBE SHOWN. OTHER TUBES MAY BE USED.

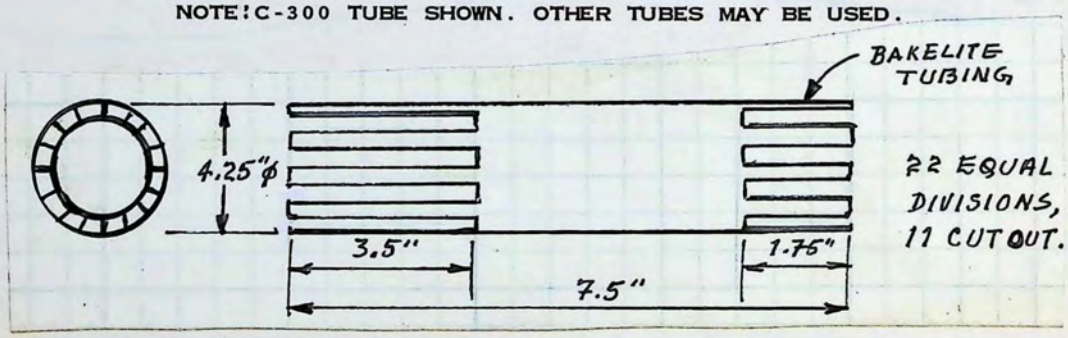

BASKET-WEAVE COIL FORM

PRI = 60T, TAPT AT 8, 20, 38, 60 TURNS.
SEC = 90T, DSC, TAPT AT 15, 30, 55, 90 TURNS.

COUNT FROM ENDS OF PRI AND SEC
CLOSEST TOGETHER.

(Sht. 1)

THE FIRST "INFRADYNE", 1926

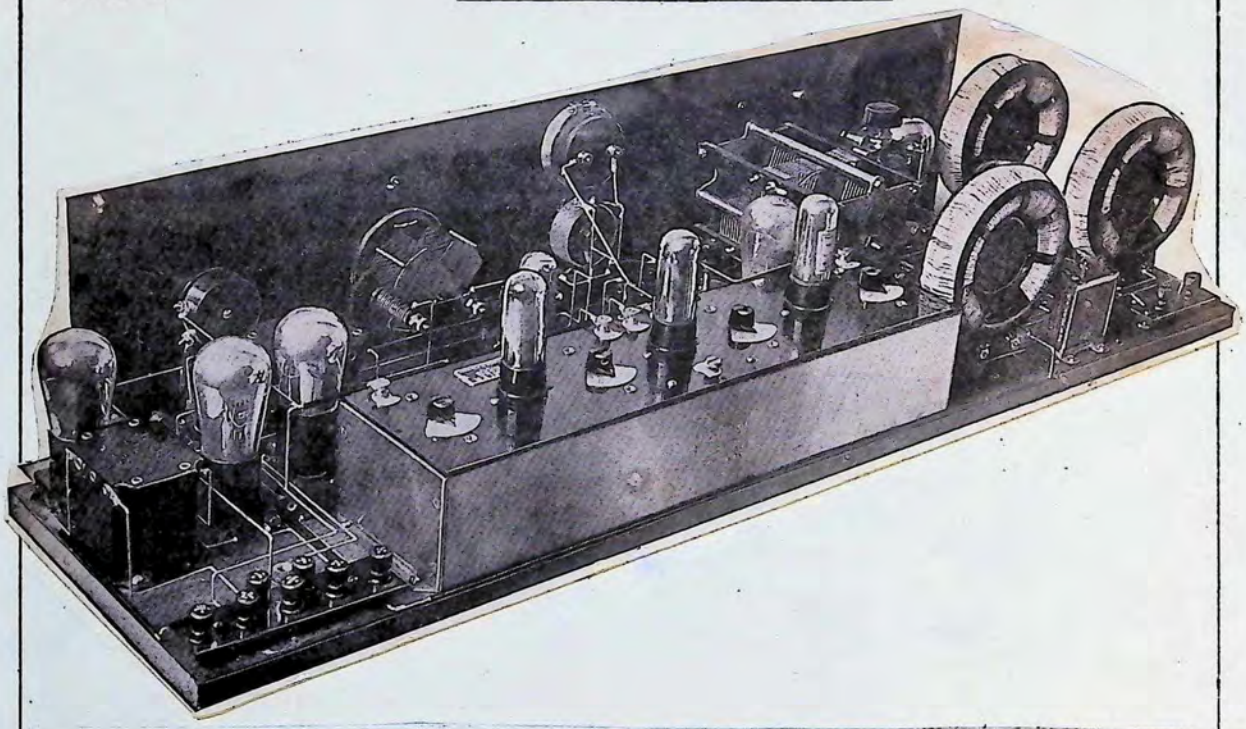

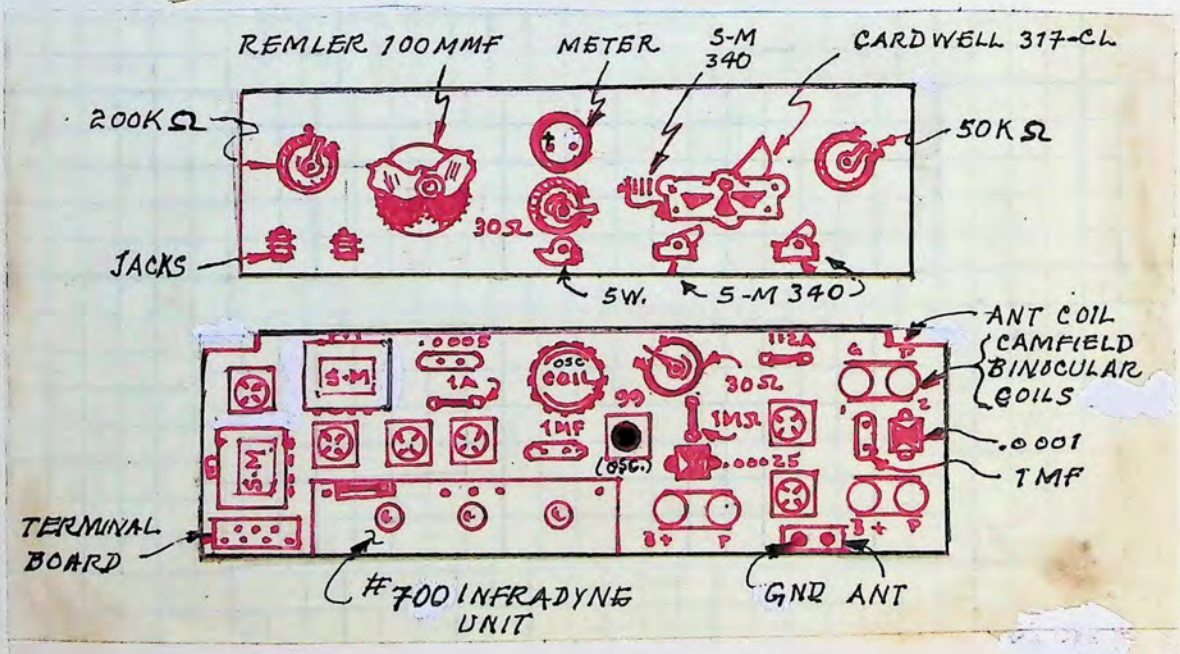

PLAN VIEW - FIRST VERSION
See 2nd Version For Baseboard Dimensions.

(R 8-26)

EARLY "INFRADYNE" BASEBOARD LAYOUTS

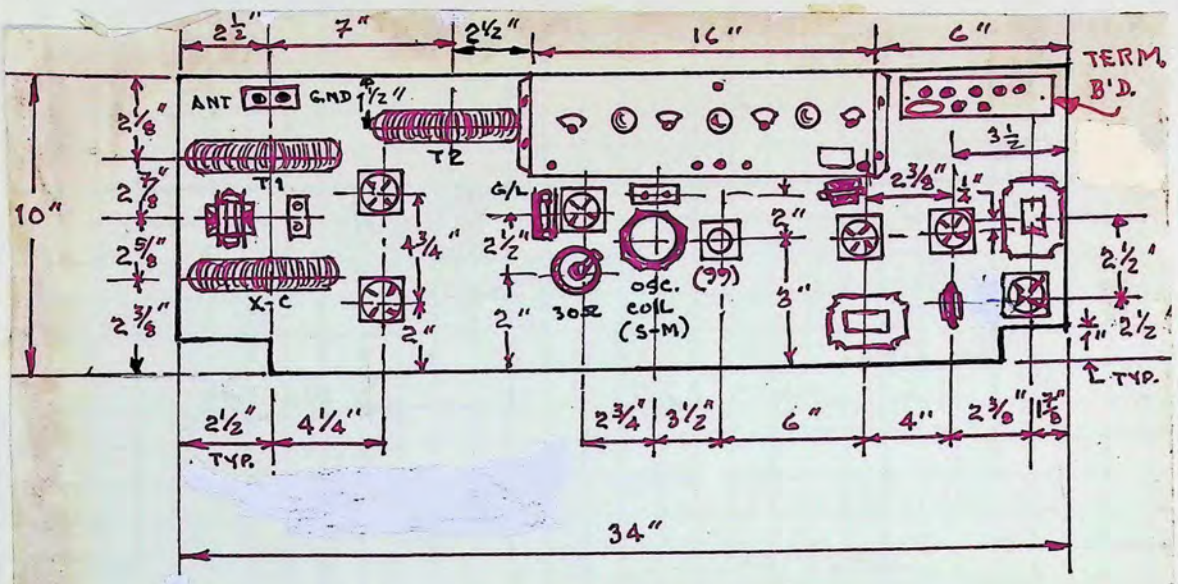

BASEBOARD LAYOUT
(2nd Version)

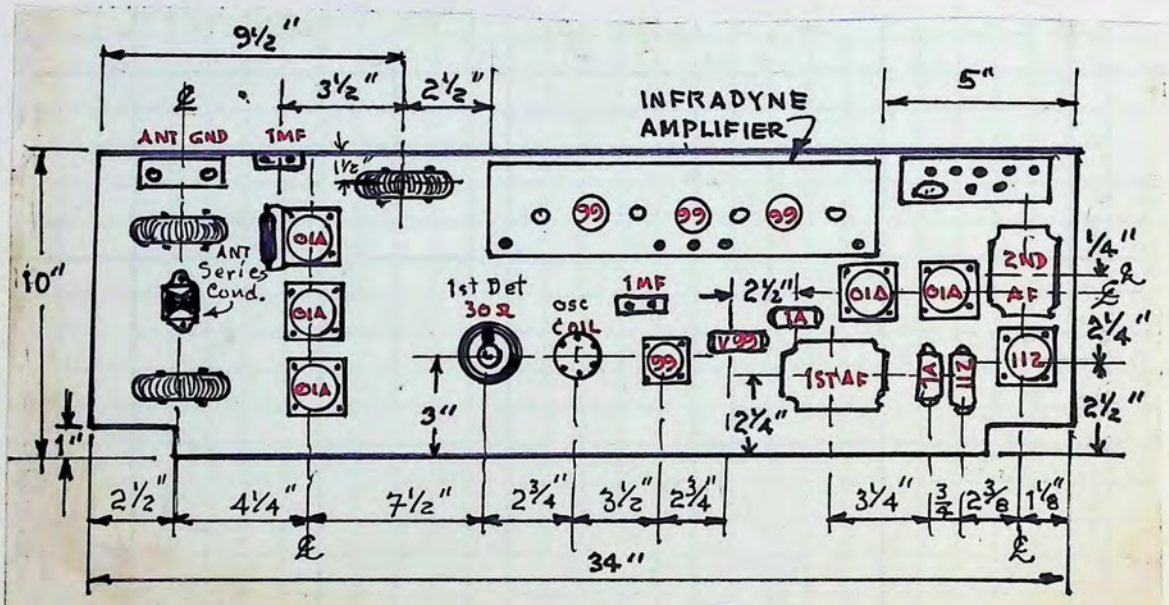

3rd VERSION BASEBOARD LAYOUT

THE FIRST "INFRADYNE" - PICTORIAL DIAGRAM

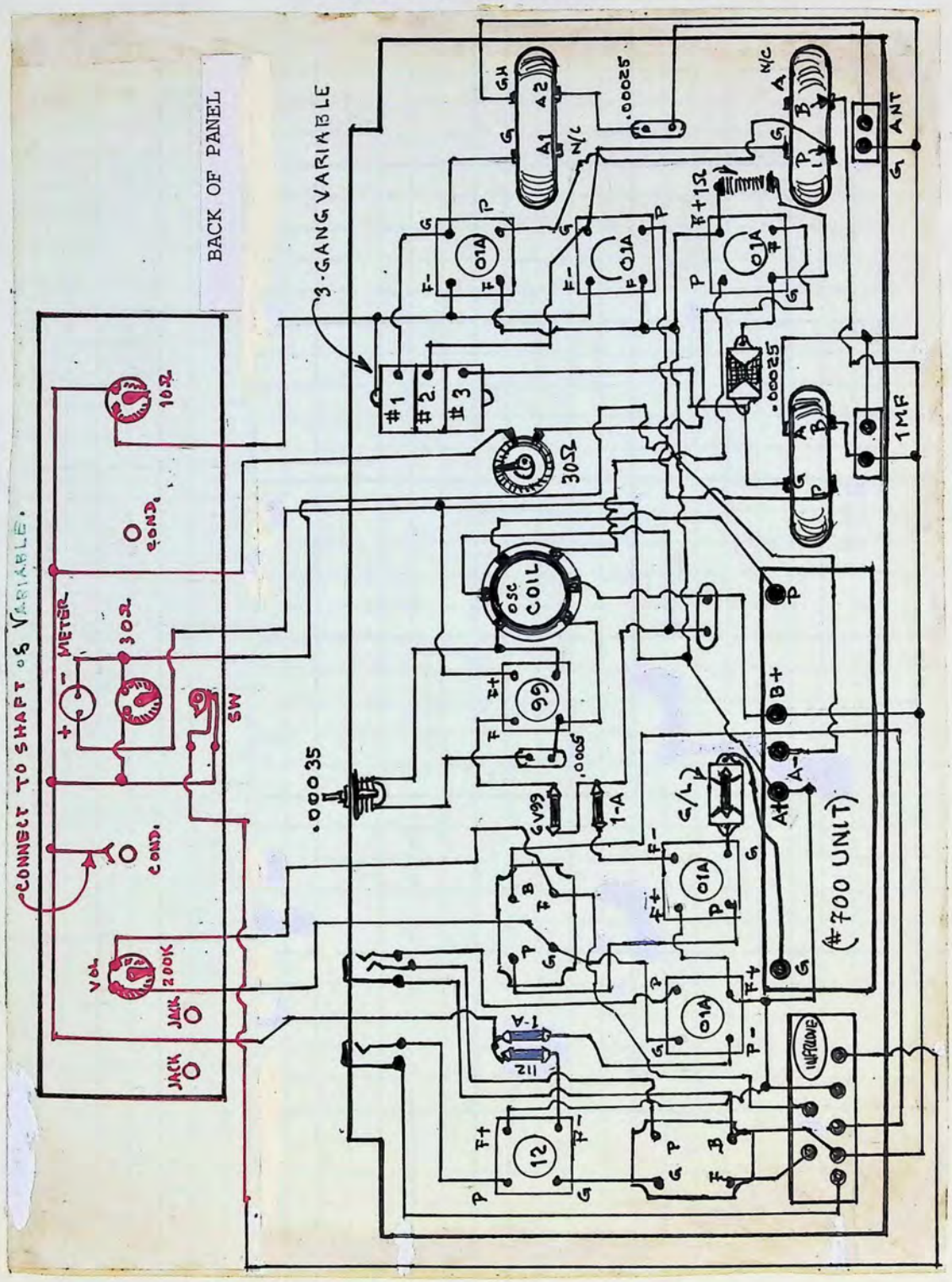

(Sht. 4)

THE FIRST "INFRADYNE", 1926

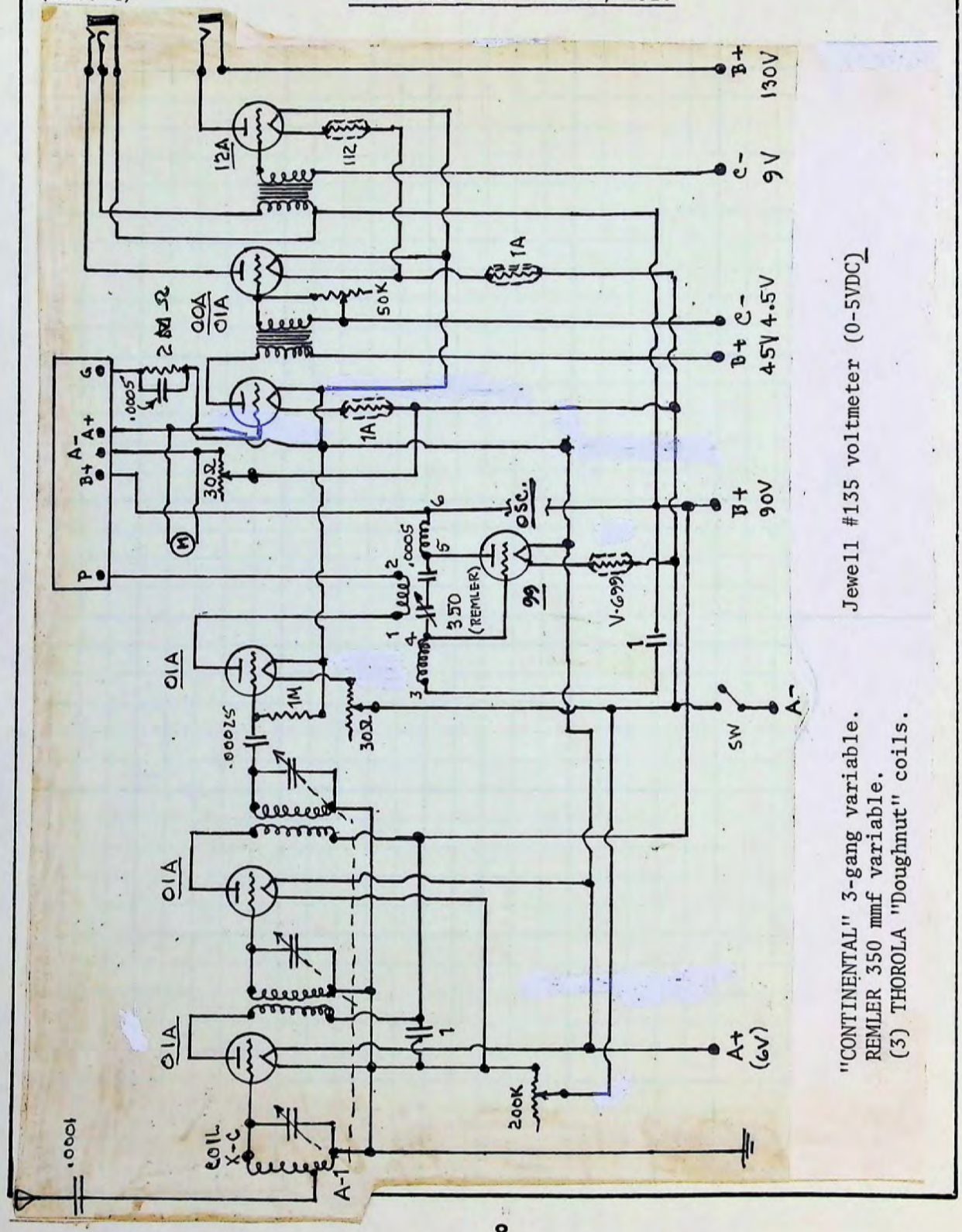

"CONTINENTAL" 3-gang variable.
REMLER 350 mmf variable.
(3) THOROLA "Doughnut" coils.

Jewell #135 voltmeter (0-5VDC)

(Sht. 5)

THE FIRST "INFRADYNE", 1926

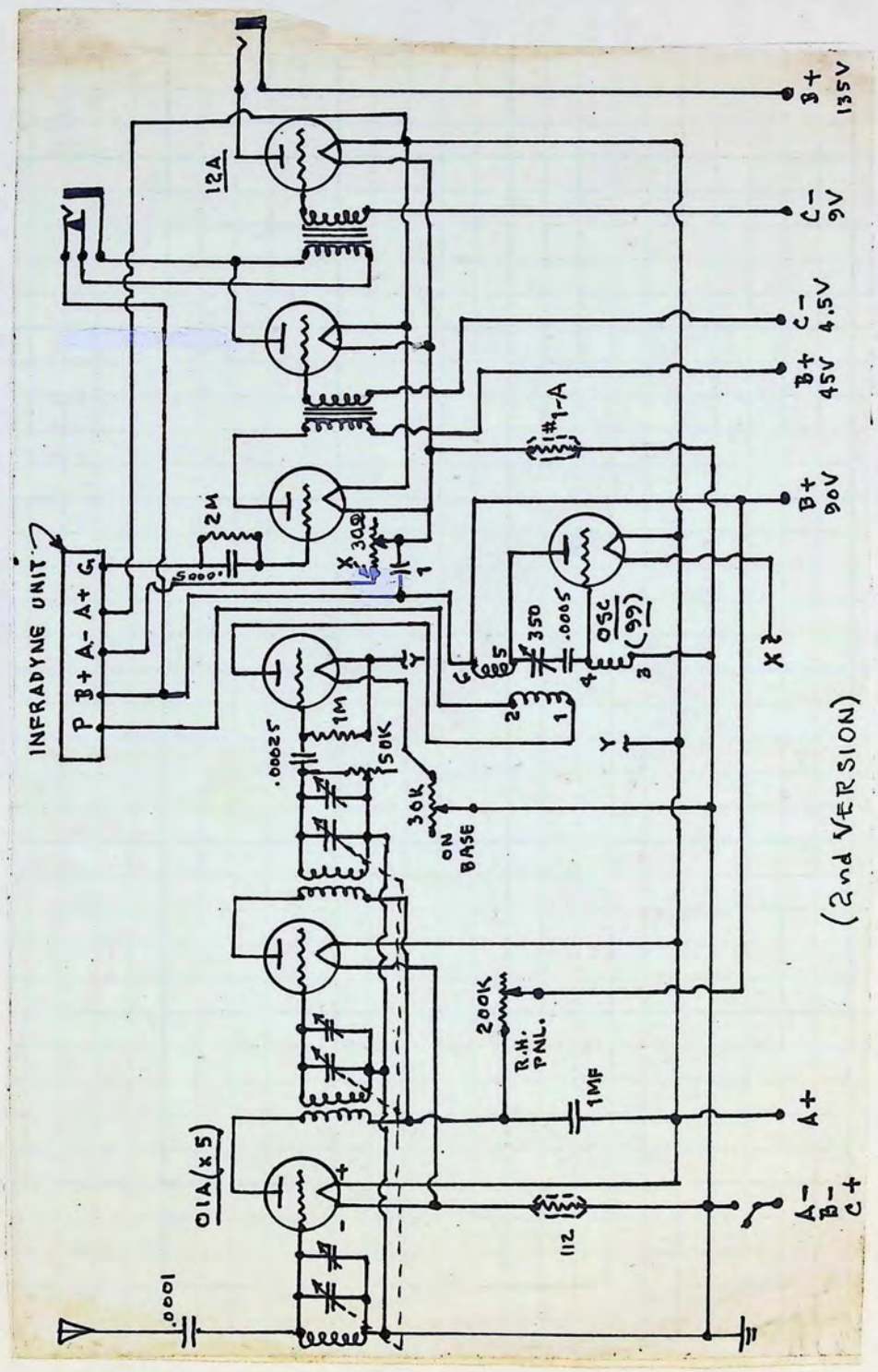

(R 1-27)

(Sht. 6)

THE FIRST "INFRADYNE", 1926

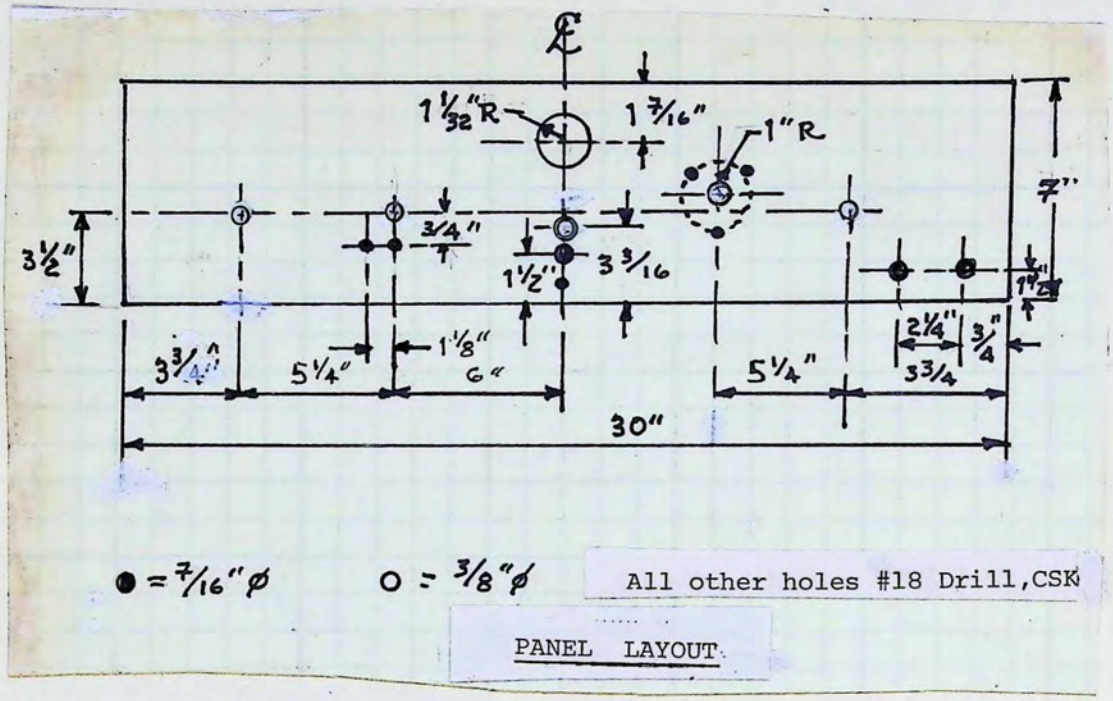

PANEL LAYOUT

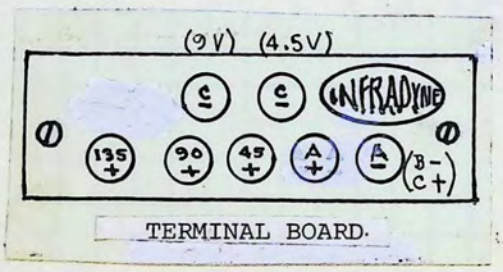

TERMINAL BOARD

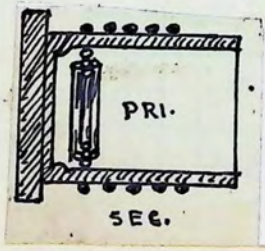

Cross-Sexion of #700 Unit's RF Xfrmrs. Refer to Page 16 For Full Schematic of the #700 Unit.

(Sht. 7)

THE FIRST "INFRADYNE", 1926

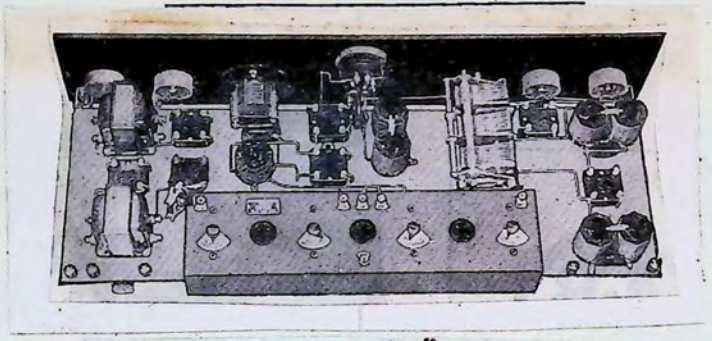

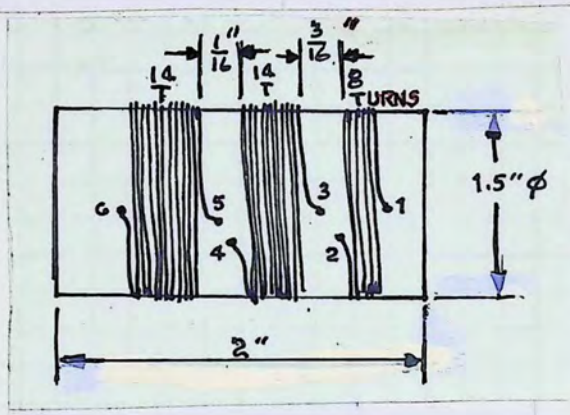

TAPT OSC. COIL - 1ST VERSION

Wound in same direction.
#24 DSC; numbers correspond to numbers on schematic of 1st version

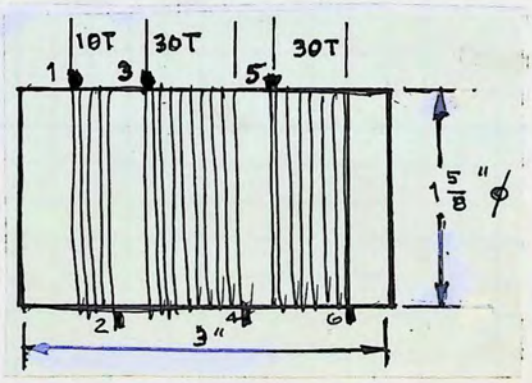

TAPT OSC. COIL - 2ND VERSION

#24 DSC; spacing same as in 1st Version.

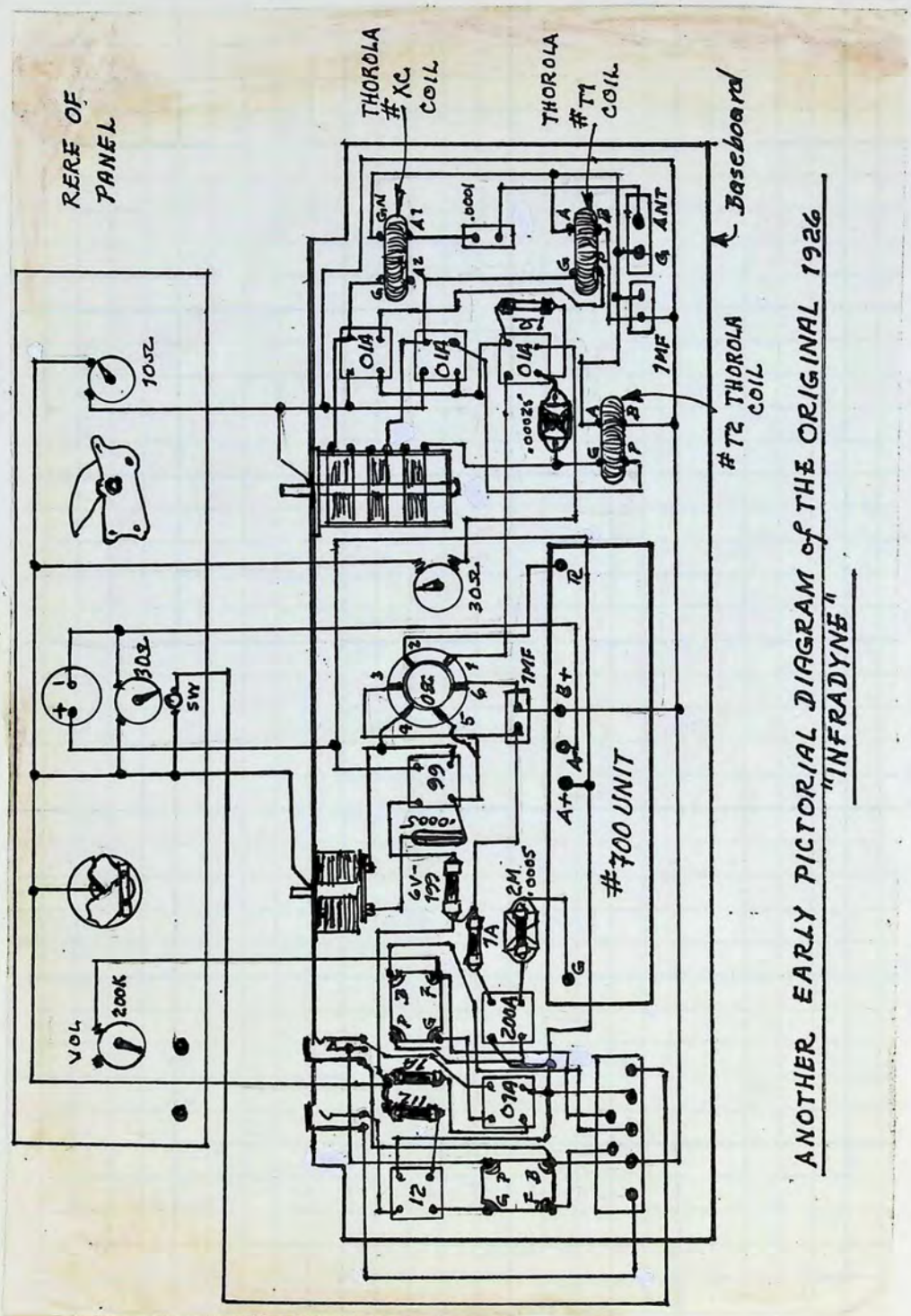

ANOTHER EARLY PICTORIAL DIAGRAM of THE ORIGINAL 1926 "INFRADYNE"

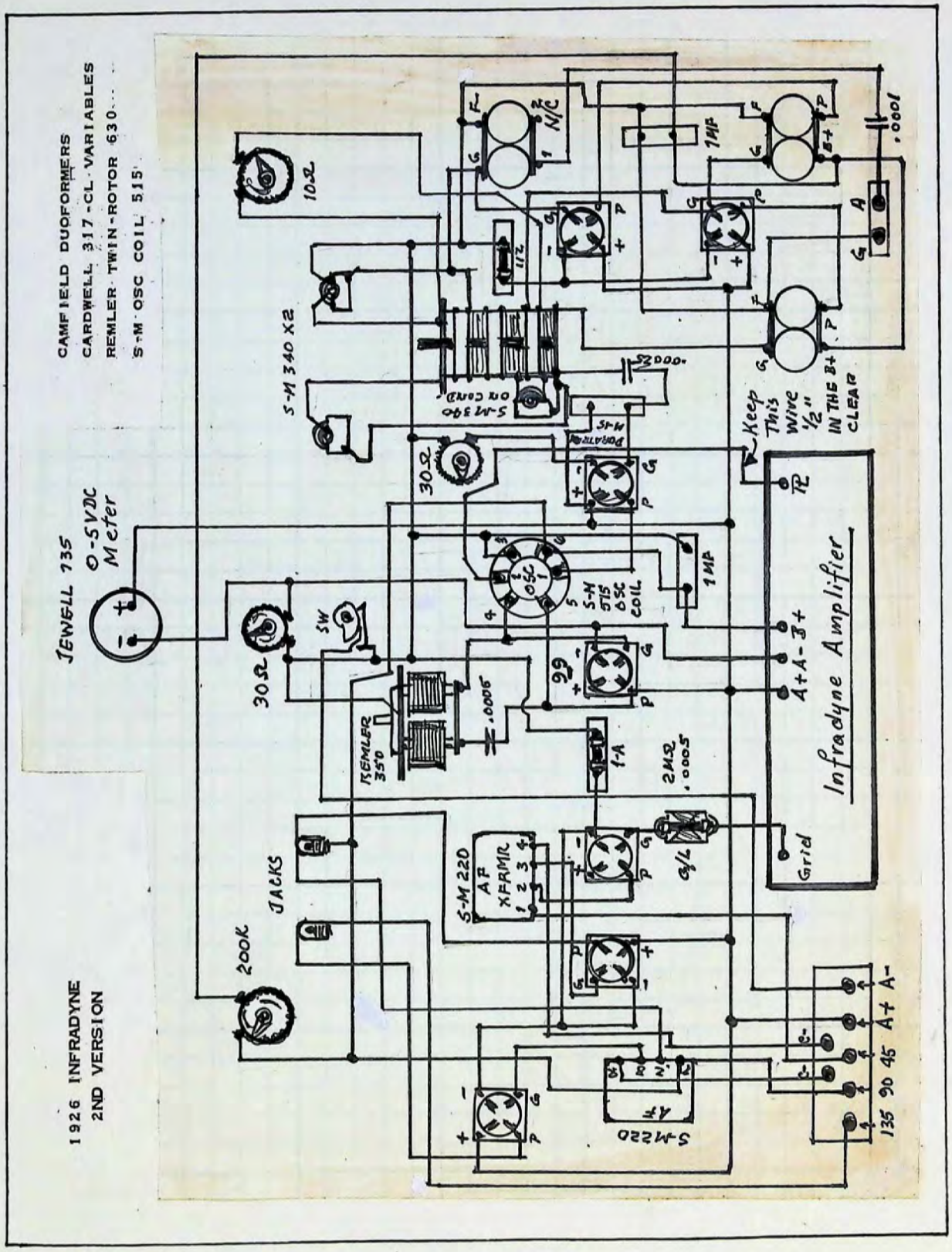
CAMFIELD DUOFORMERS
CARDWELL 317-CL VARIABLES
REMLER TWIN-ROTOR 630
S-M OSC COIL 515
JEWELL 135
0-5VDC Meter
10Ω
S-M 340 X2
S-M 340 OR COIL
30Ω
SW
30Ω
REMLER 350
.0005
JACKS
200K
S-M 220 AF XFRMR
S-M 515 OSC COIL
1MΩ
1-A
2MΩ .0005
G/L
Keep This Wire 1/2" IN THE B+ CLEAR
Infradyne Amplifier
Grid
A+ A- B+
.0001
S-M220 AF
135 90 45 A+ A-
1926 INFRADYNE
2ND VERSION

(Sht. 8) THE FIRST "INFRADYNE, 1926

PARTS ORIGINALLY USED BY E.M.SARGENT & C.T.RAYMENT:

1. REMLER "Infradyne" Amplifier, #700.
2. REMLER 350mmf Variable.
3. CONTINENTAL 3-gang Variable with Verniers.
4. GENERAL RADIO 30-ohm Rheostat.
5. THOROLA #33 Toroidal Coil Set.(3)
6. NATIONAL Type "B" CCW Dials (2).
7. JEWELL #135 Meter, 0-5 VDC.
8. AMER-TRAN "DeLuxe" AF Xfrmrs. (2).
9. EBY Engraved Bining Posts (9).
10. YAXLEY FIL Switch.
11. BENJAMIN UX Sockets (7).
12. "AMPERITES", 112, 6V-199, 1-A(2).
13. CENTRALAB 50K-ohms Rheostat.
14. Rheostat Dials, 2".
15. SANGAMO .0005 MFD Condenser w/ Clips.(2)
16. ELECTRAD Single-Circuit Jack, N/C.
17. " " " " , N/O.
18. " Grid-Leak Mounting.
19. " " " 1M-ohms.
20. " .0001 Condenser.
21. " 1 MFD Condenser (2).
22. " .00025 MFD Condenser.
23. " 2 MFD Grid-Leak.
24. FORMICA Walnut Panel 7" x 30" x 3/16".
25. REDWOOD Baseboard 10" x 34" x 3/4"

NOTE:

NOTE: CAMFIELD "Duoformer" binocular coils used originally in 1st version for ANT and RF stages;Toroidal coils used in second version.
S-M #220 AF xfrmrs. used originally; SAMSON xfrmrs. later.

OPERATING PROCEDURES

MAKE-READY PROCEDURE (A 50' ANT Assumed):

1. Turn 1st DET rheostat full on (on baseboard).
2. Turn LH panel rheostat to 30 on the dial.
3. Turn intermediate tubes up to 3 volts.
4. Set VOL control to zero.
5. Plug a PM speaker into 2nd AF jack.
6. Tune set exactly like a super-het, using both hands and crossing dials slightly.
7. Set will be tuned to approximately 350 meters.
8. Tune in and log a few local stations.
9. Try to find a weak signal about 100 miles away.
10. If a weak signal is found, set main tuning dials so that signal is strongest, and leave dials in that position.
11. Try a slight re-adjustment on the AMP unit vernier.
12. After finding the best vernier setting, tighten AMP adjusting screw with an insulated screw-driver.
13. Do this slowly while maintaining 3 volts on the tube filaments.
14. Tighten adjusting screw until AMP oscillates.
15. Back off screw until oscillation stops.
16. The AMP unit should not be disturbed again.
17. Back-off DET rheostat, noting signal strength. Signal will decrease, then suddenly increase.
18. Leave rheostat at that point. If amplification

peak cannot be found, turn rheostat full on, and leave at that point.

19. Set is now ready for alignment.

ALIGNMENT PROCEDURES:

1. Adjust both sliding plate verniers on the 3-gang variable (we now call them trimmers or padders).
2. Turn up panel rheostat for best volume and tone from a moderately loud station that can be found around 65 on the dial.
3. Set OSC right on the station.
4. Rock the 3-gang variable across this station. If the signal comes in sharply at only one point, set is in alignment and the trimmers left alone.
5. As aligment approaches the proper settings, the first two tubes may go into oscillation. Retard with the panel rheostat.
6. If alignment can be secured around 60°, it will hold good for the full travel of the 3-gang variable.
7. If powerful locals ride through a signal, insert a 100 MMF condenser in series with the ANT.

* * *
* *
*

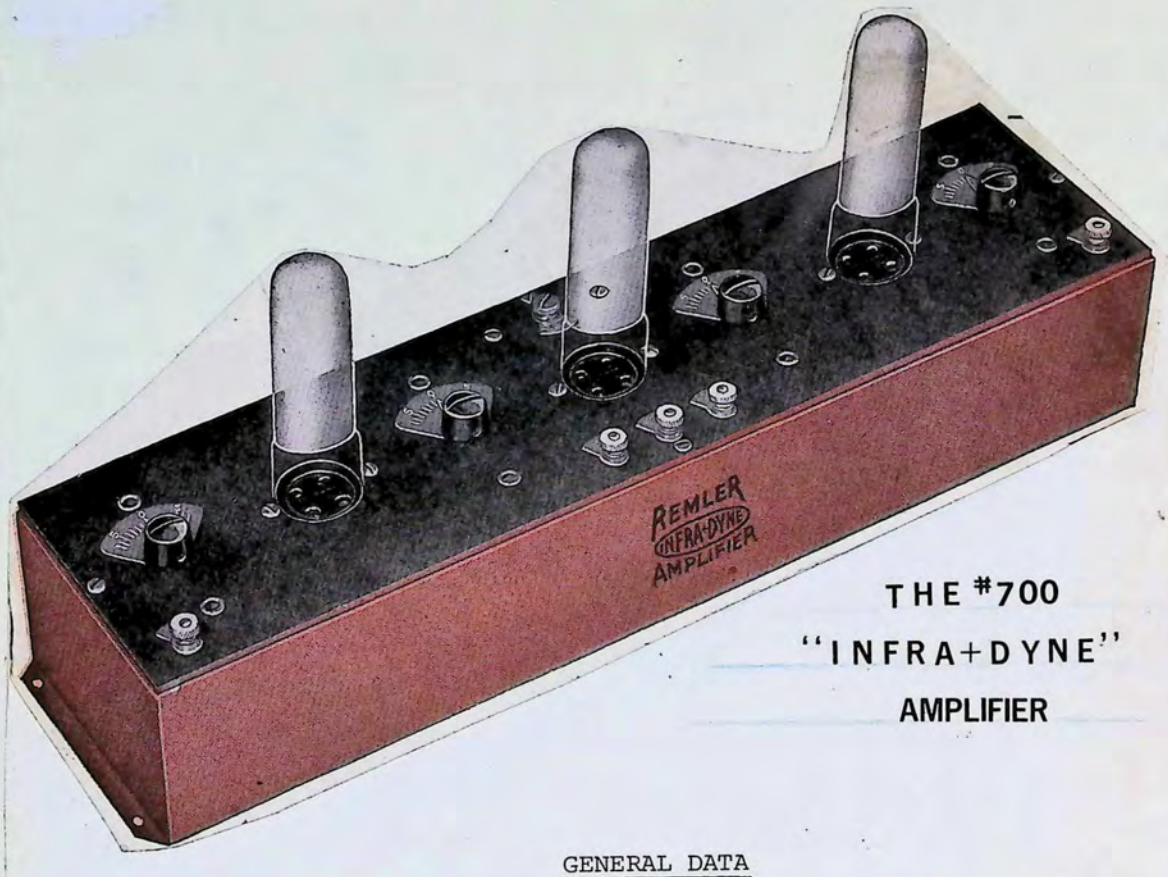

THE #700 "INFRA+DYNE" AMPLIFIER

GENERAL DATA

1. Trimmers = .00005 MFD, typical 5 places.
2. Fixed condensers = .00011 MFD, typical 8 places.
3. All coils peaked at fixed wavelength of 86 meters (3400 KC.). wound on open-frame coil form 1¼"Ø.
4. PRI = 20 turns, #28 DSC.
   SEC = 35 turns, #28 DSC.
   PRI wound inside SEC.
5. Bakelite top panel; copper chassis.
6. There were two versions of the #700; the one shown above is the later version.
7. See following page for bottom view of #700.

(Sht. 2)

THE #700 "INFRADYNE" AMPLIFIER

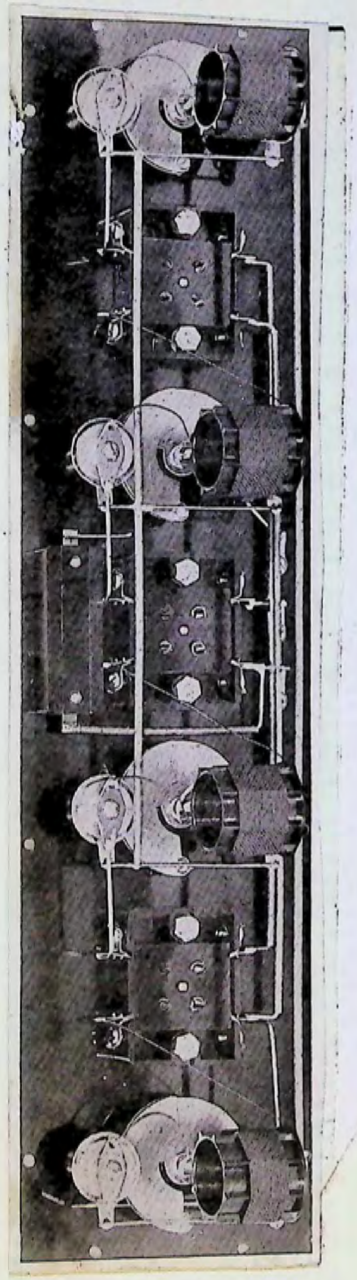

INTERIOR BOTTOM VIEW "INFRADYNE 29" #700 AMPLIFIER

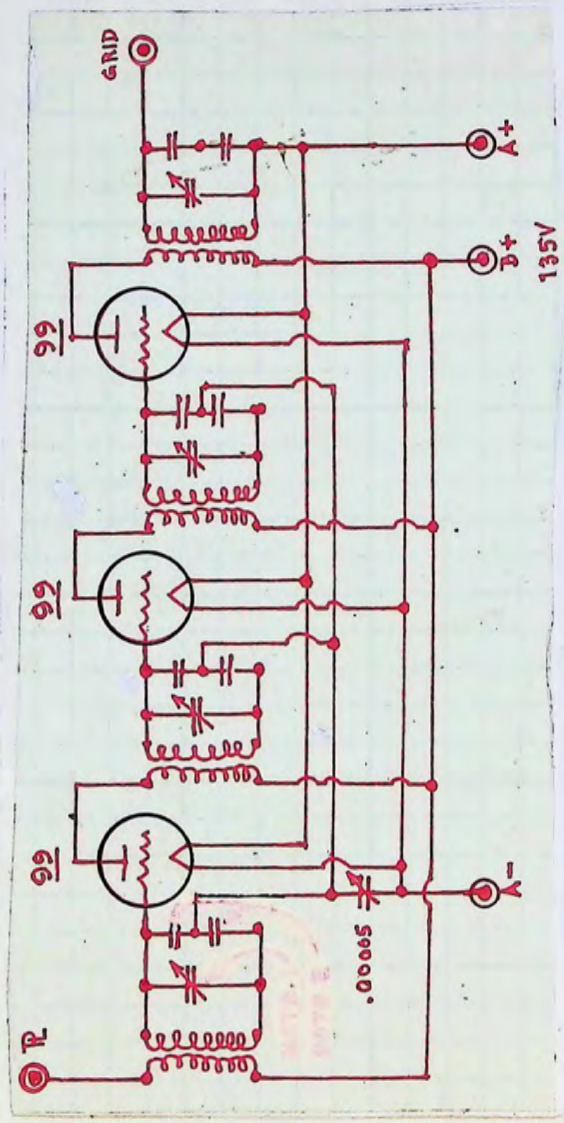

SCHEMATIC OF THE "INFRADYNE" AMPLIFIER

"INFRADYNE" AMPLIFIER CHECK-OUT:

Prior to connecting the Amplifier into either an Adapter circuit or a receiver, the following checks should be made. They are simple continuity checks and require only a few minutes.

1. Remove any power from unit and place on bench.
2. Remove all 99 tubes from the Amplifier.
3. Use the panel voltmeter on panel or a seperate meter to read the "C" battery voltage. If no voltage is indicated, Amplifier input circuit is open.

CONTINUITY CHECK:

Check points marked A-B-C one at a time, as indicated. Voltmeter should read not less than 5V at any point. "C"-battery is 4.5V.

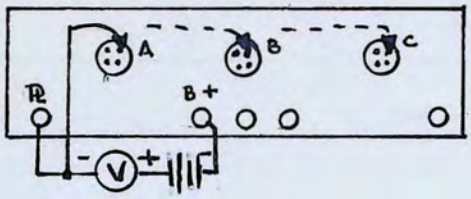

SECONDARY CIRCUIT CHECK:

Check points marked A-B-C-D one at a time. Voltmeter should not read less than 5V at any point.

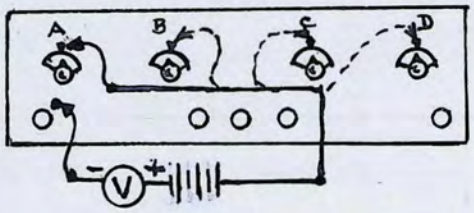

CONNECTING AMPLIFIER ADAPTER TO RECEIVER:

Regardless of the Adapter configuration you are using, connexions to a receiver are always the same. If receiver has UX-type sockets, disconnect the wire from the plate lug of the DET socket, and the plate lug of the 1st AF xfrmr. Adapters were available for such changes - e.g., the Na-Ald "Connectrad".

The plate lug of the DET in the receiver will be connected through

the Adapter switch to the #1 terminal of the tapt coil in the Adapter.

The receiver DET tube becomes the MIXER tube.

If a by-pass was used in the receiver at the AF xfrmr., remove it and install a by-pass in the Adapter between the plate lug and A-; refer to the A-K schematic, for an illustration.

If the receiver has REGEN. DET, the oscillator pick-up coil should be connected in DET plate circuit between the TICKLER and plate lug of the 1st AF xfrmr. Lug #1 of the pick-up coil should be connected to the TICK. coil. The DET plate in the Adapter is then connected to the plate lug of the 1st AF xfrmr.

If C-battery detection is used in the receiver, substitute a grid-leak and grid condenser BEFORE connecting the Adapter. If a seperate C-battery was used for bias, remove the C-battery and connect the C- and C+ leads together. If a C-battery also supplied bias to other tubes, disconnect only the lead to the last RF xfrmr. SEC and the C- terminal.

NOTES:

1. If A+ and B- have been made common in the receiver, they will automatically be made common in the Adapter.

2. Neutrodynes should not require additional neutralisation after installing the Adapter.

3. O1A tubes CANNOT be used in the Amplifier; 99's only.

4. Do not twist leads connecting Adapter to receiver.

5. The Amplifier/Adapter will not, in itself, improve the quality of reproduction, although it will decrease background noise and enhance sensitivity of the RF sexion.

ADJUSTING THE "INFRADYNE" AMPLIFIER:

1. Tune in a strong signal with the receiver, and have the Amplifier so placed that the INCREASE screw is away from you.

2. Place the second from the left knob at ZERO; the third knob at MAX; and adjust for loudest level by rocking OSC dial.

3. Adjust first knob at the left for maximum signal, while rocking the OSC dial.

4. Adjust the fourth knob from the left, which will tune broadly. (The circuit controlled by the second knob controls the I.F.) Use only an insulated tool to make all adjustments.

5. If the above steps throw the set into oscillation, rotate the INCREASE screw until it stops. Under no circumstances should you try to stop any oscillation without performing the first three steps.

6. Turn the INCREASE screw down until the radio breaks into oscillation, then back off the INCREASE screw until oscillation ceases. Leave INCREASE screw fixed at that position.

7. If Step 6 does not bring the Amplifier into oscillation, test all voltages and tubes of the Amplifier.

8. If Amplifier does not come up to oscillation, proceed as follows:

   a) Disconnect Amplifier B+ wire from #6 coil post.
   b) Connect a 10-Ohm rheostat in series with B+ wire.
   c) Rheostat and INCREASE screw should be worked together until Amplifier comes up to oscillation.

* * *
* *
*

Standard radio hardware was used, other than those specified as REMLER items. No. 14 tinned round buss-bar was recommended, without "spaghetti". If the 71 was used as the output tube and more than 130V was placed on the Plate, an output filter was required for PM speakers.

The INFRADYNE ADAPTER

The Infradyne Amplifier, Unit #700, was, according to its designer, E.M.Sargent, the result of two years of experimentation at the Sargent-Rayment lab in Oakland, California. The work was apparently sponsored by Grey & Danielson, best known as "Remler". It was patented in 1925 and proved to be extremely popular.

Aside from its original purpose, which was to enhance the Infradyne receiver, several commercial manufacturers of sets also adopted the Amplifier, generally referring to them as "Adapters" in their adverts. Among such firms were Atwater-Kent and Kolster, which are detailed herein.

While the Infradyne Amplifier could be employed with most any TRF then current, it could NOT be employed with any circuit that had been reflexed, or with a super-het. Sargent compiled a listing of 27 seperate tests to be conducted on the unit, most of which were unnecessary, in terms of modern knowledge; in consequence, they are not given here.

The OSC coil specified by Sargent was the S-M 110-B, wound with heavy enamelled wire. However, as you may not have a S-M coil in your junk-box, I am giving coil-winding data that will permit you to wind your own. A modification of Sargent's design was done by C.J.Fitch, radio engineer and contributor to early radio media, and his re-design, as well as his modified OSC coil are given herein. You will note that the layouts were almost identical.

Aside from the Remler twin-rotor variable condenser and the originally specified Jewell voltmeter, all parts are non-critical. Any good brand will work quite well. The panel for both versions was 7" x 18", and the baseboard, wood, was 9" x 17", the Infradyne Amplifier being 17" long, thus taking up the whole wid th of the base, and making a neat installation.

The only installation note is this: remove the connexion to the plate of the DET in your set and run a lead to Terminal 1 of the OSC coil: remove the connexion to "P" of the first AF transformer - the one that connected to the plate of the DET, and run a lead to the plate of the 01A on the Infradyne Amplifier. The 90V B+ and the filament leads are connected to the set as shown.

The Infradyne Amplifier does show-up at flea-circuses, so why not keep an eye out for one? It is an interesting unit.

SARGENT INFRADYNE AMPLIFIER

JEWELL VOLTMETER

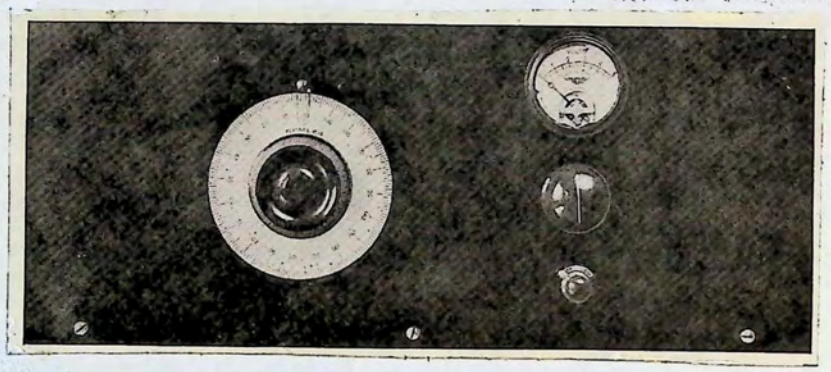

REMLER DIAL

7" X 18" PANEL

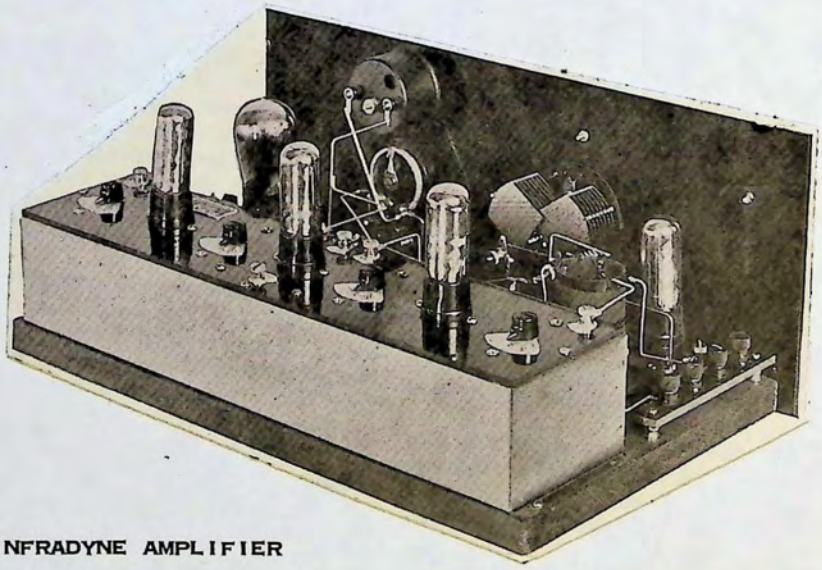

INFRADYNE AMPLIFIER

SARGENT & FITCH INFRADYNE ADAPTERS

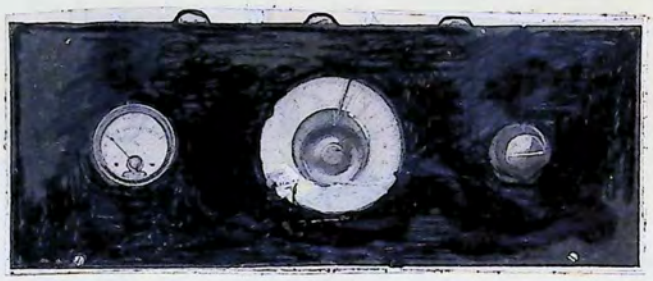

FITCH PANEL

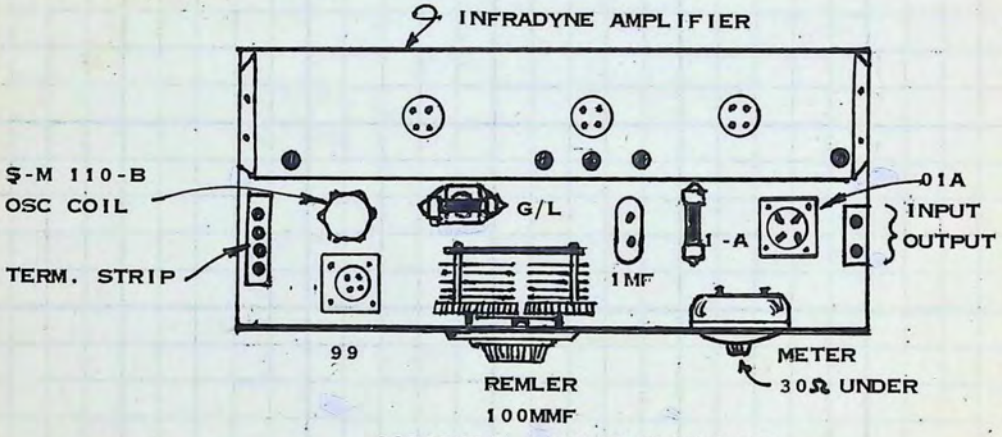

SARGENT's LAYOUT PLAN VIEW

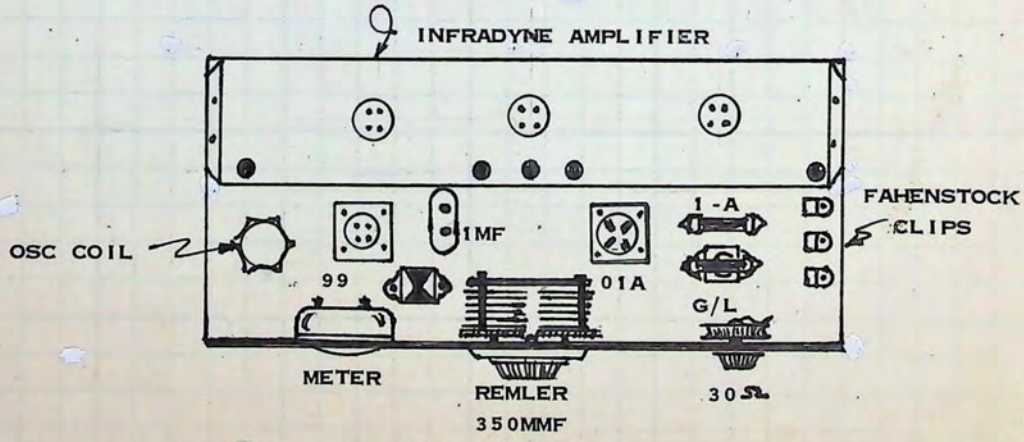

FITCH's LAYOUT PLAN VIEW

SARGENT's INFRADYNE ADAPTER

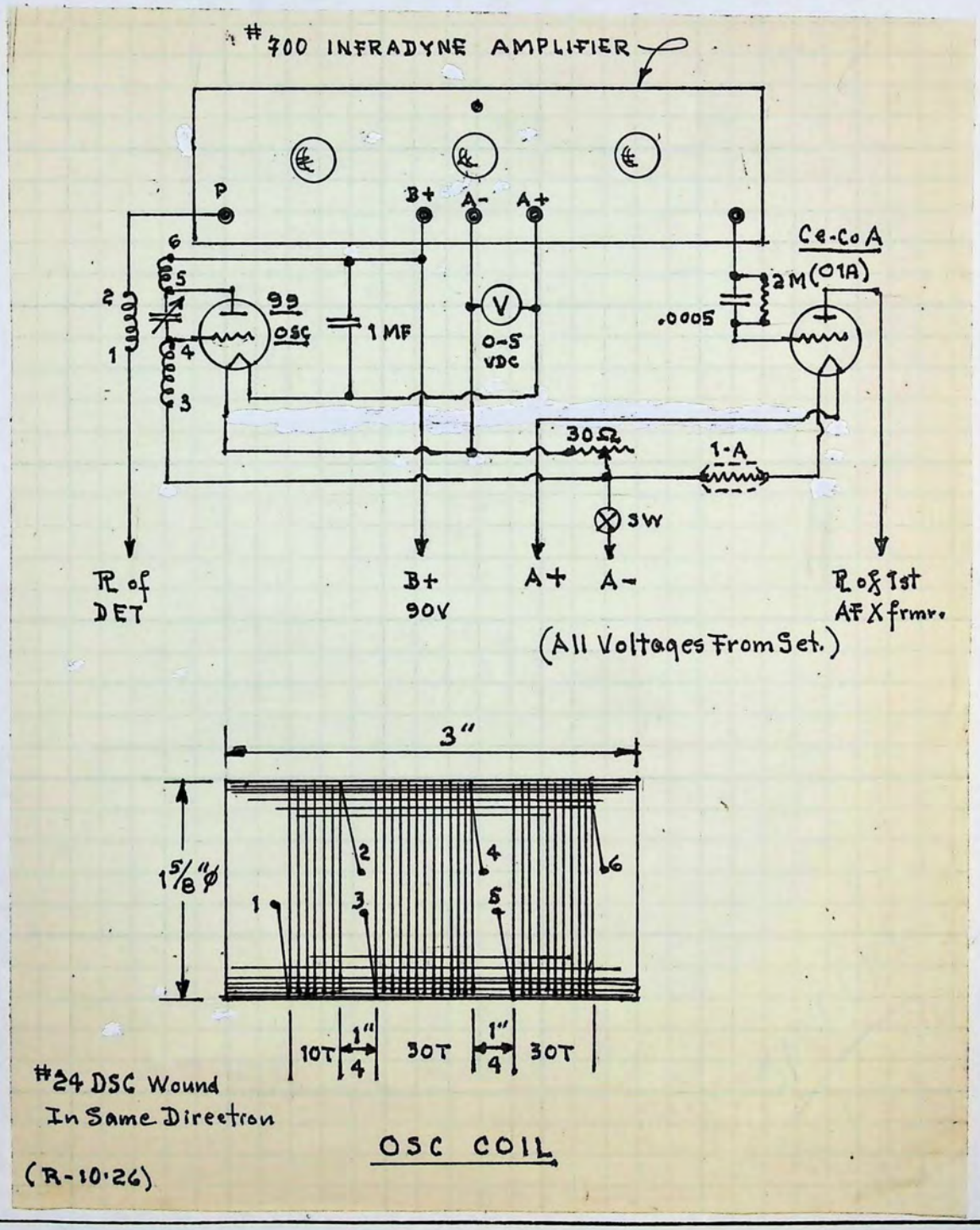

FITCH's INFRADYNE ADAPTER

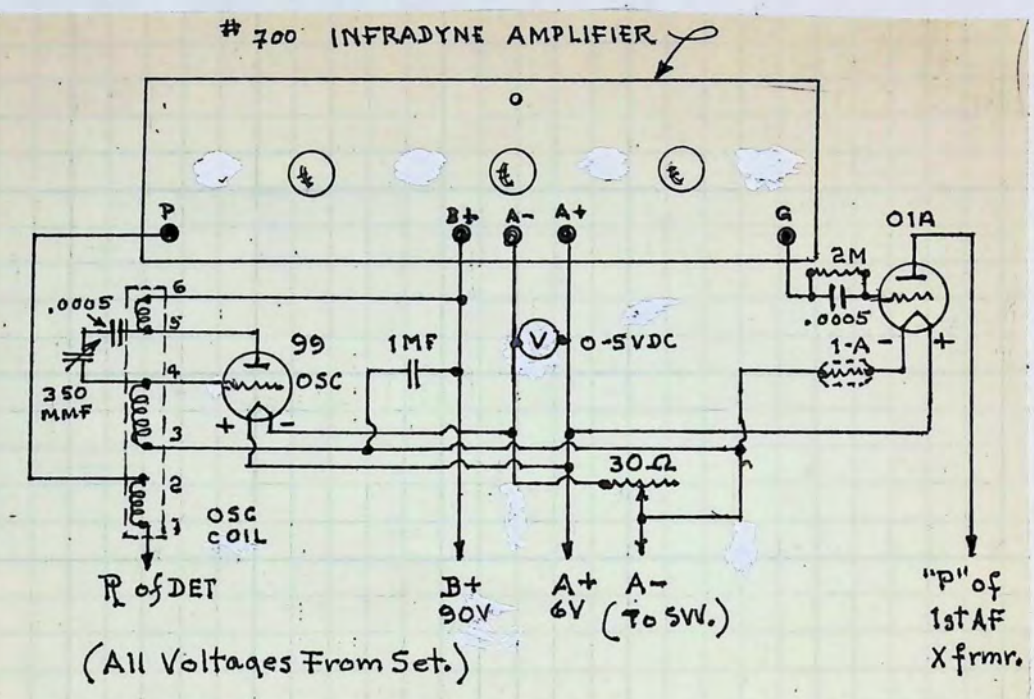

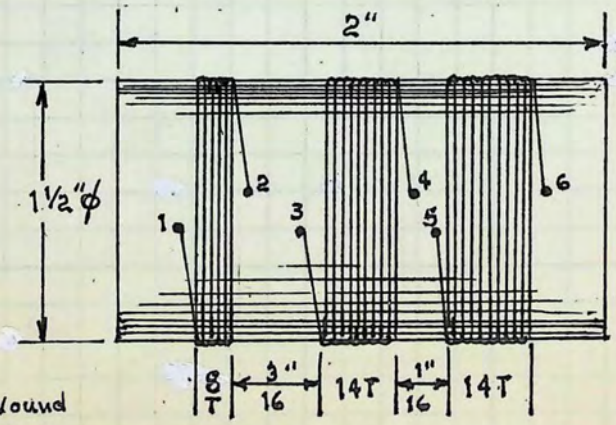

#24 DSC Wire Wound In Same Direction.

OSC COIL

(RN-12-26)

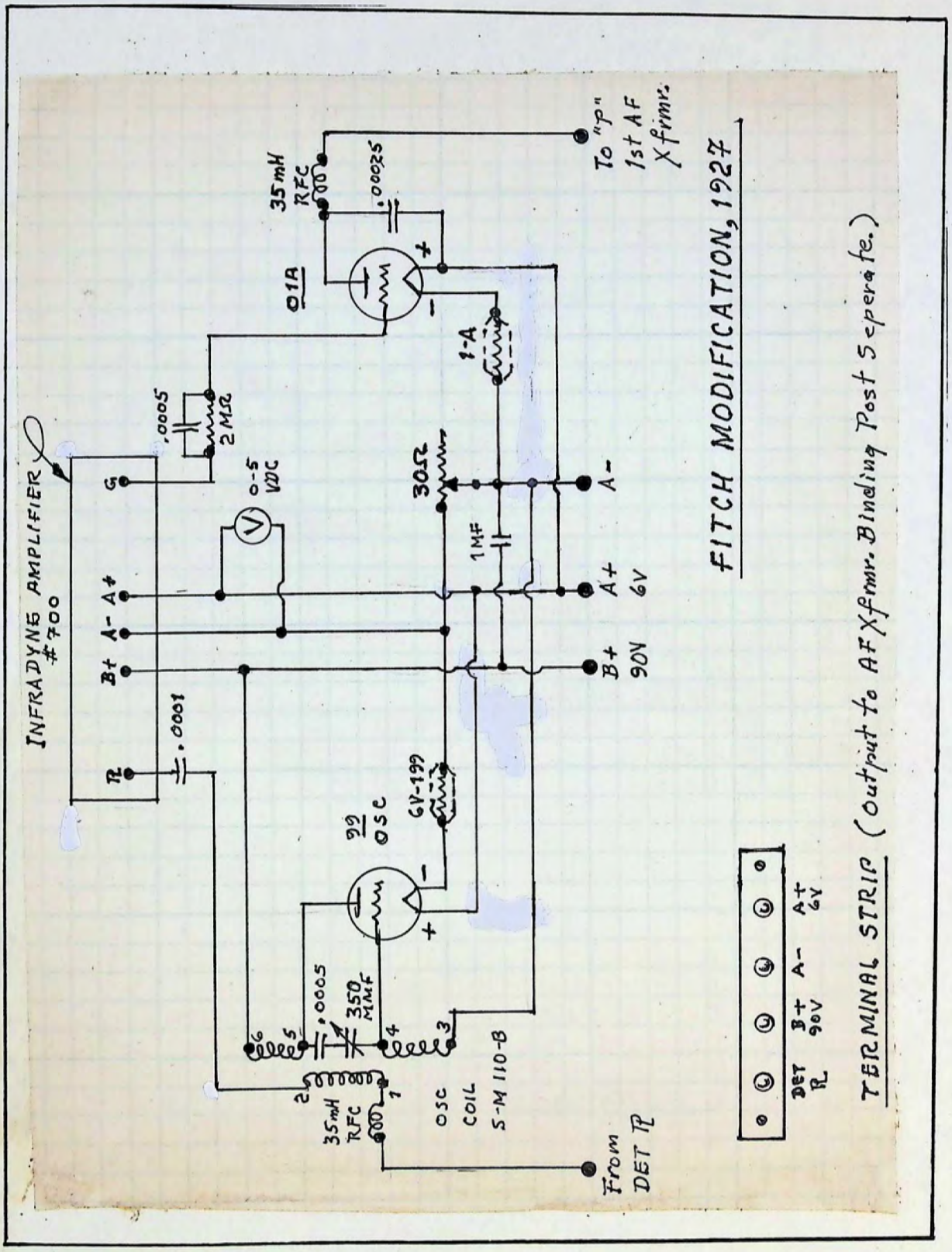
INFRADYNE AMPLIFIER #700
G
A+
A-
B+
R
.0005
2MΩ
0-5 VDC
.0001
35mH RFC
.00025
01A
1-A
30Ω
1MF
A-
A+ 6V
B+ 90V
To "P" 1st AF Xfmr.
99 OSC
6V-199
.0005
350 MMF
35mH RFC
OSC COIL S-M 110-B
From DET R
FITCH MODIFICATION, 1927
DET R
B+ 90V
A-
A+ 6V
TERMINAL STRIP (Output to AF Xfmr. Binding Post Seperate.)

TWO COMMERCIAL ADAPTATIONS OF THE "INFRADYNE" AMPLIFIER, 1926

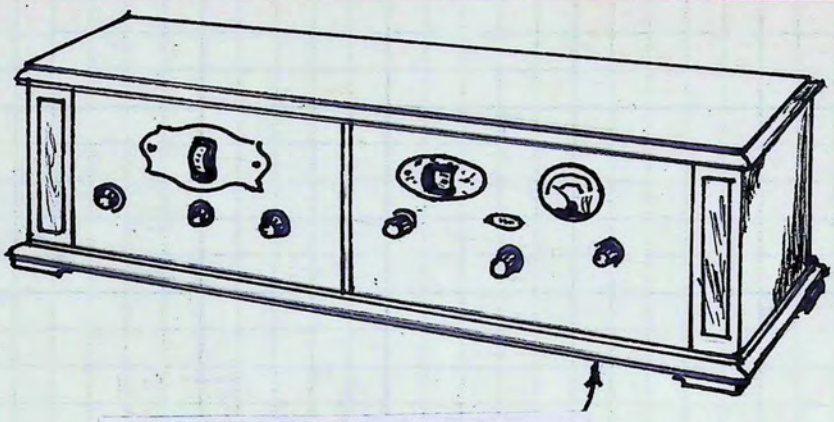

KOLSTER ADAPTER CONFIGURATION

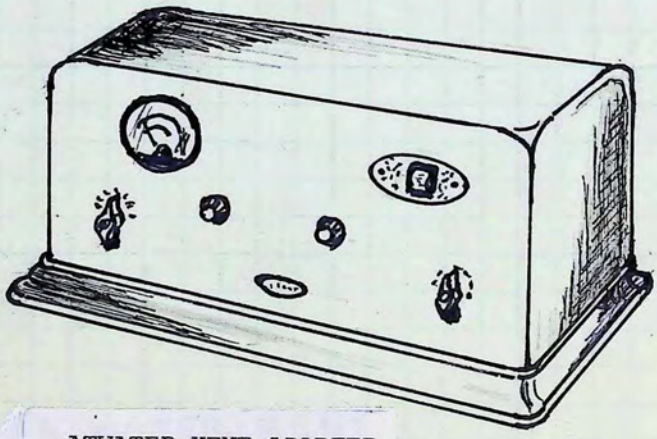

ATWATER-KENT ADAPTER CONFIGURATION

(Sht. 1) ATWATER-KENT "INFRADYNE" ADAPTER, 1926

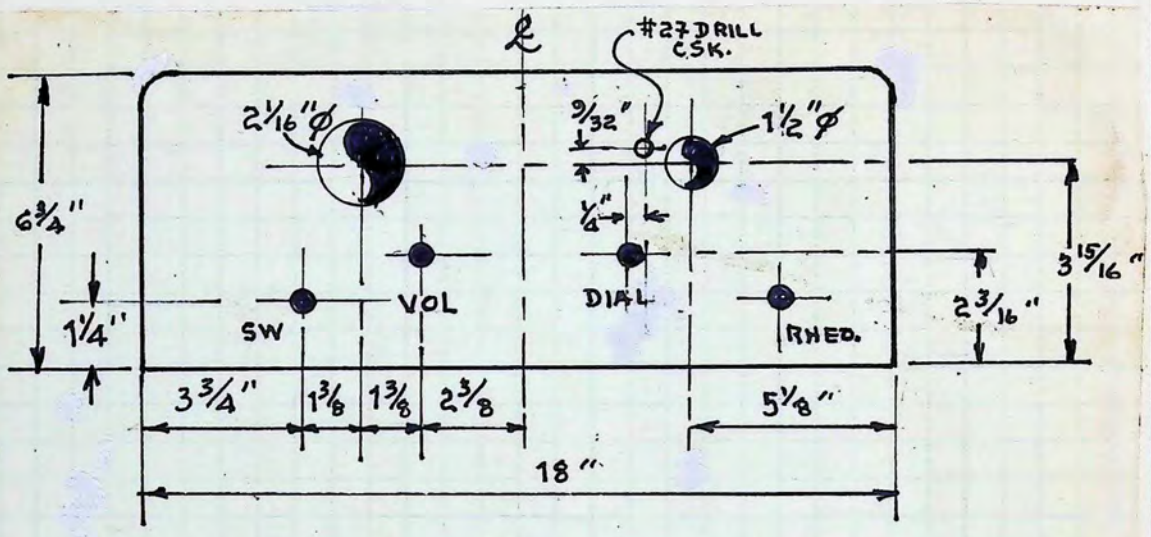

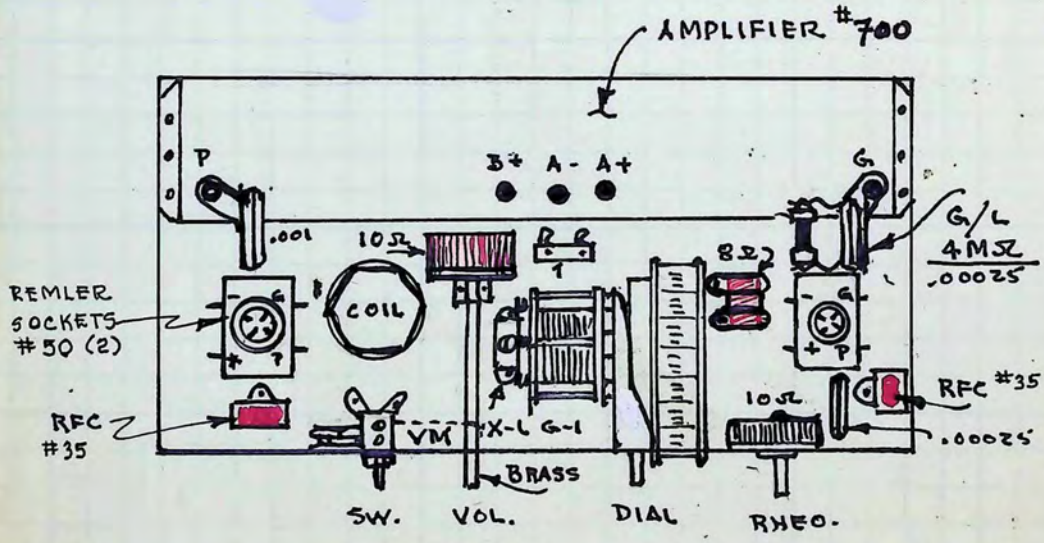

8-ohm = Yaxley #808 Flat-Wire
Coil = L1,L2,L3 (or S-M 110B)
Variable = Remler #659

(Sht. 2) ATWATER-KENT "INFRADYNE" ADAPTER, 1926

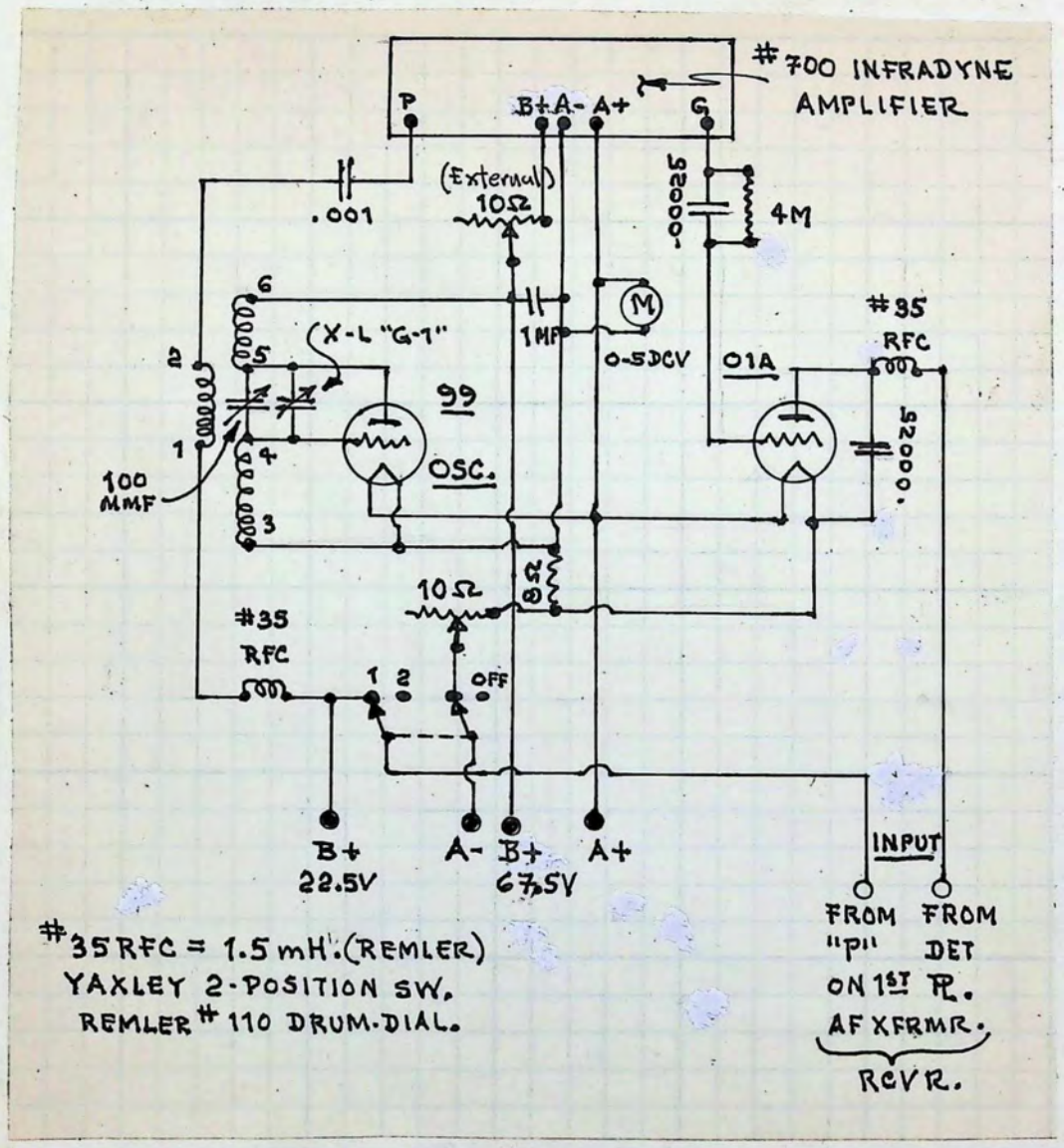

"INFRADYNE" ADDENDA

The "Improved" INFRADYNE of 1926 reflected the following changes to the first version of the year before. These improvements were said to have increased the efficiency of the set to a marked degree; my own experiments suggest that they were right. If you have the first INFRADYNE and would like to "improve" it, note of the following changes will assist you.

Cardwell 3-gang SLF variable condensers.
25mmf Trimmers for each sexion of the dual-variable, 3-plates each, mounted on back of front panel.
Electrad rheostats used throughout.
Amer-Tran "DeLuxe" AF trnasformers (2).
Test jack in the Plate circuit removed - its function taken over by the 3-plate trimmers.
The OSC coil was mounted directly behind the 1st DET tube.
OSC tube socket placed behind OSC variable.
Jones multi-plug placed on sub-panel, left-hand corner.

Probably the most important "improvement" was the change in the #700 INFRADYNE Amplifier resonant frequency - from 95 meters to 85 meters (3,200 cycles to 3,490 cycles).

ORIGINAL PARTS LIST

Panel = 7" x 28". Sub-Panel = 8.75" x 27" x .125".
Voltmeter Type 217 0-7, # 506/#140 Weston.
Camfield Duoformers, Type 22K, 1 set.
S-M 110 OSC coupler/ Camfield #23 coupler/Remler 620 coupler.
Karas shelf brackets (2).
Frost 530 (6) sockets: Benjamin 9040 socket (1).
S-M #220 AF transformers (2).
Jones BM multi-plug.
Amperites 1, 1-A, 112.
Eby binding posts (5).
Electrad potentiometers 200K, 50K: rheostats 10-ohm (2); 1-M & 2-M grid-leaks: .0005 & .00025 MF condensers.

* * *

INFRADYNE OSCILLATOR HOOK-UPS

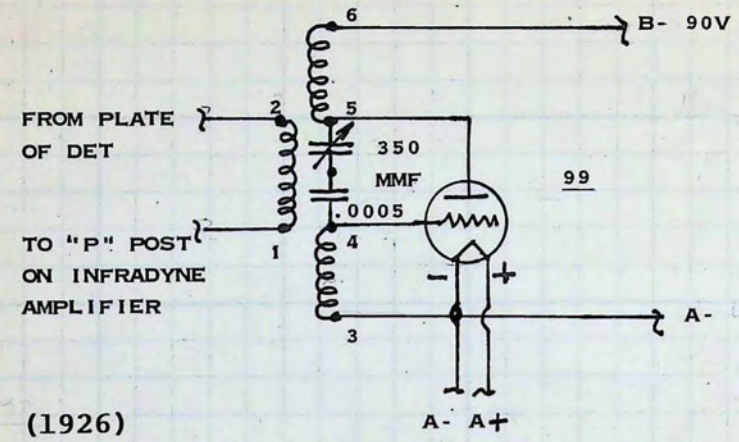

(1926)

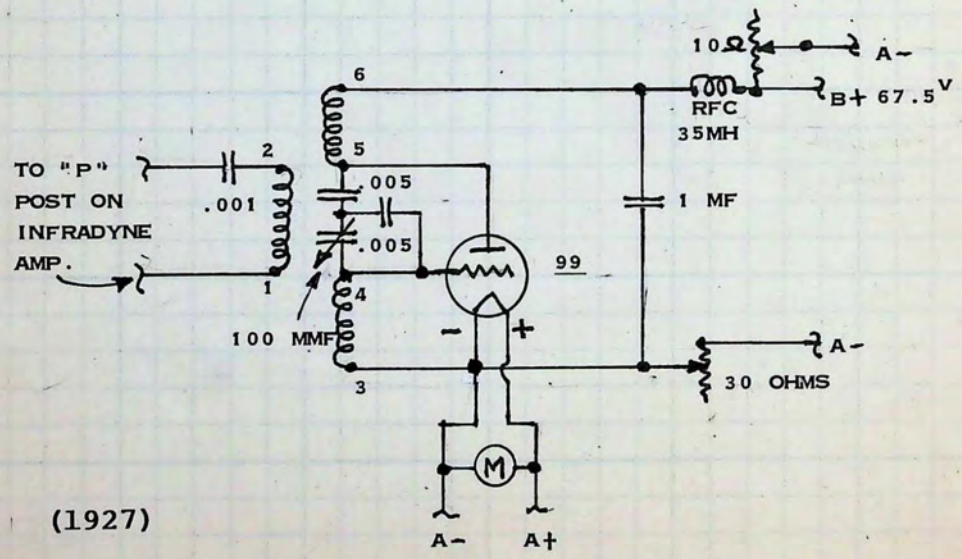

(1927)

THE ORIGINAL INFRADYNE CIRCUIT MODIFICATIONS

Original plate voltage of 90V was applied to the first two RF, mixer, oscillator, and first AF tubes. The circuit will be found to be more stable with a plate voltage of 67.5V.

If a plate voltage of 22.5V is applied to the mixer tube and a grid-leak of 4 or 5 megohms, critical adjustment of the mixer tube is obviated.

In order to apply a plate voltage different from that applied to the Infradyne Amplifier #700, it is necessary that a blocking condenser of .001mfd should be inserted between the #35 choke and the "P" terminal on the Amplifier.

Passage of the 3400 KC. through the "B" battery is prevented by the #35 choke. The mixer tube plate voltage of 67.5 from the "B" battery is dropt to 22.5V via a 50K-ohm resistor.

Instead of adding another terminal, 67.5V instead of the 45V originally specified is applied to the DET tube. To effect the change, disconnect from the Frost #954 Gem-Jack (phone jack) the wire originally connected between the jack and the #6 terminal of the tapt resistors; connect the wire between the #6 terminal and terminal #1 of the first AF transformer. The 67.5V terminal of the "B" battery will then be connected to the binding post marked 45V.

* * *
* *
*

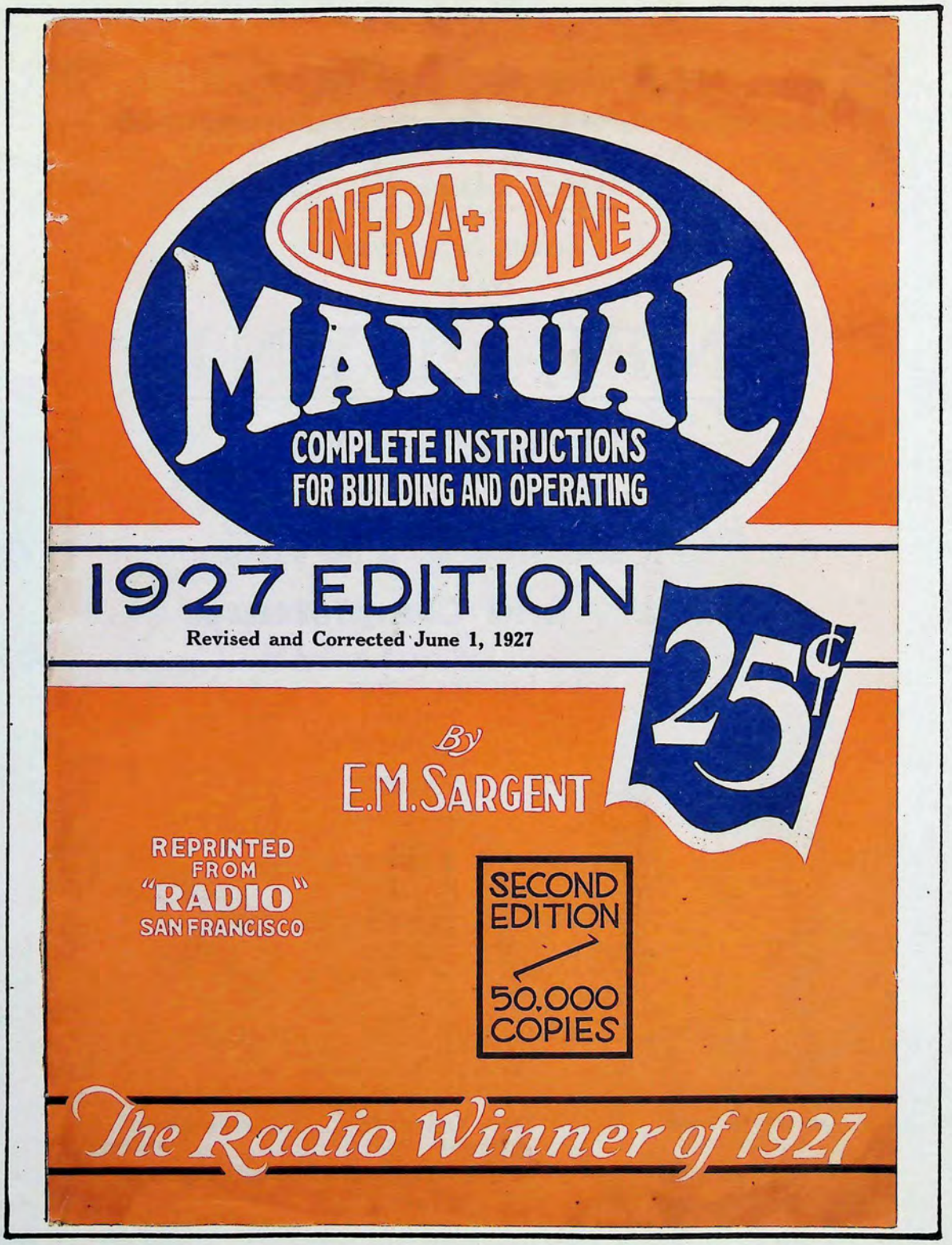
INFRA-DYNE
MANUAL
COMPLETE INSTRUCTIONS
FOR BUILDING AND OPERATING
1927 EDITION
Revised and Corrected June 1, 1927
25¢
By
E.M. SARGENT
REPRINTED
FROM
"RADIO"
SAN FRANCISCO
SECOND
EDITION
50,000
COPIES
The Radio Winner of 1927

(Sht. 1)

THE "DeLUXE INFRADYNE", 1927

There were two versions of the 1927 "DeLuxe Infradyne", an interim receiver, apparently, before the "Infradyne 28", which was probably the best of the "Infradynes", until Remler came out with their "Infradyne 29", which led to the Sargent-Rayment Seven.

The first version of the "DeLuxe Infradyne" was essentially the third version of the "Infradyne" designed in 1926. There could be counted refinements, such as the modification of the ANT Compensator, changes in the Amperites, introduction of a change-over lever, etc., but all were essentially minor improvements.

The second version of the "DeLuxe Infradyne" was interesting in that it was primarily a TRF, without the #700 and #710 units which were the distinguishing features of the earlier "Infradynes". Parenthetically, it was also easier to construct.

Dates are not very precise as to the collaboration of Best, Sargent, Rayment, Gray & Danielson (Remler), but there obviously is a blood-relationship between the "Infradynes", Remler's 45 KC unit, Best's 45 KC unit, Best's 115 KC unit, and the Sargent-Rayment 7. I have not been able to find suffienct data to straighten it out, but I feel it would be an interesting tale.

* * *
* *
*

(Sht. 2) THE "DeLuxe INFRADYNE", 1927

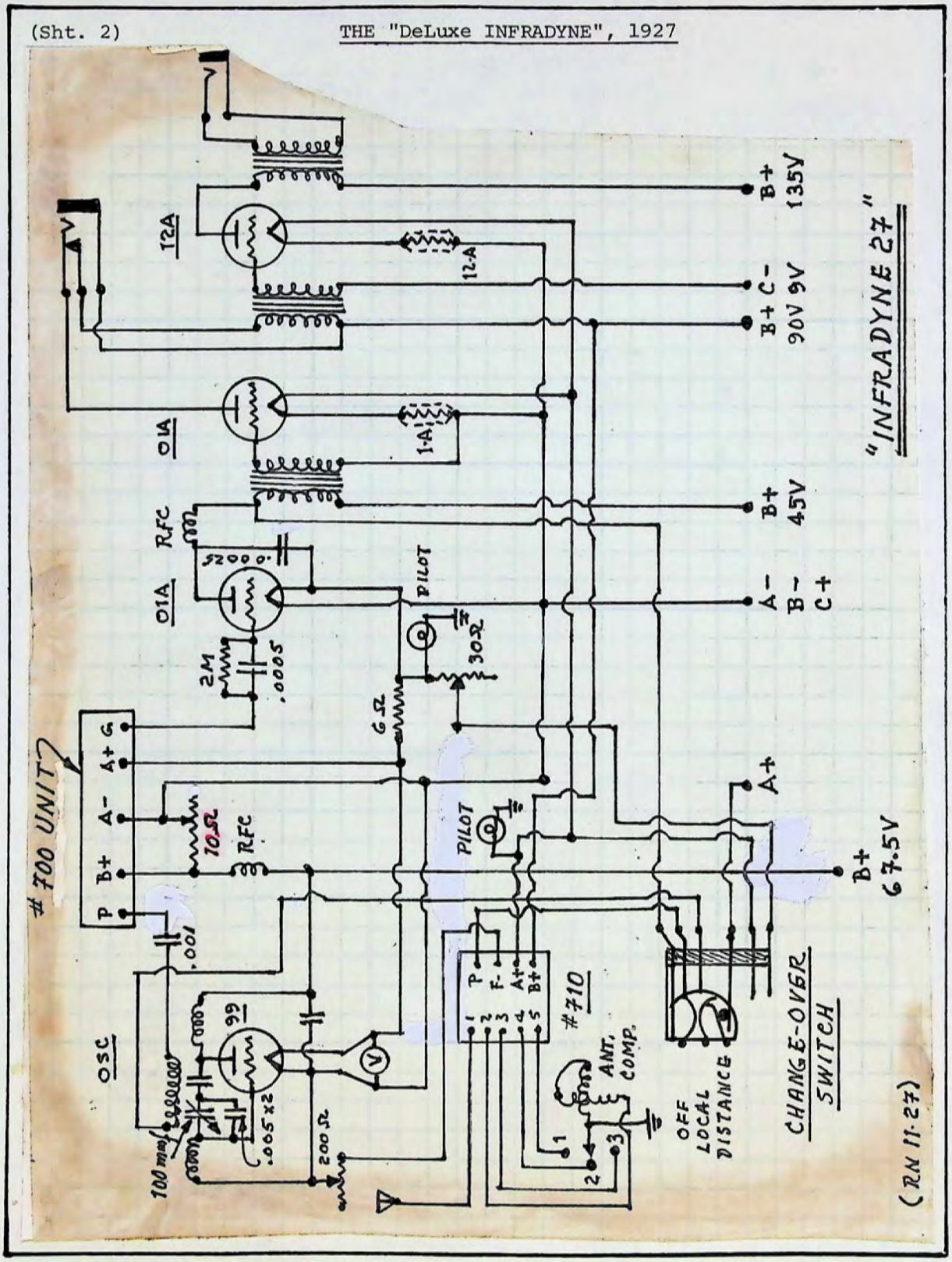

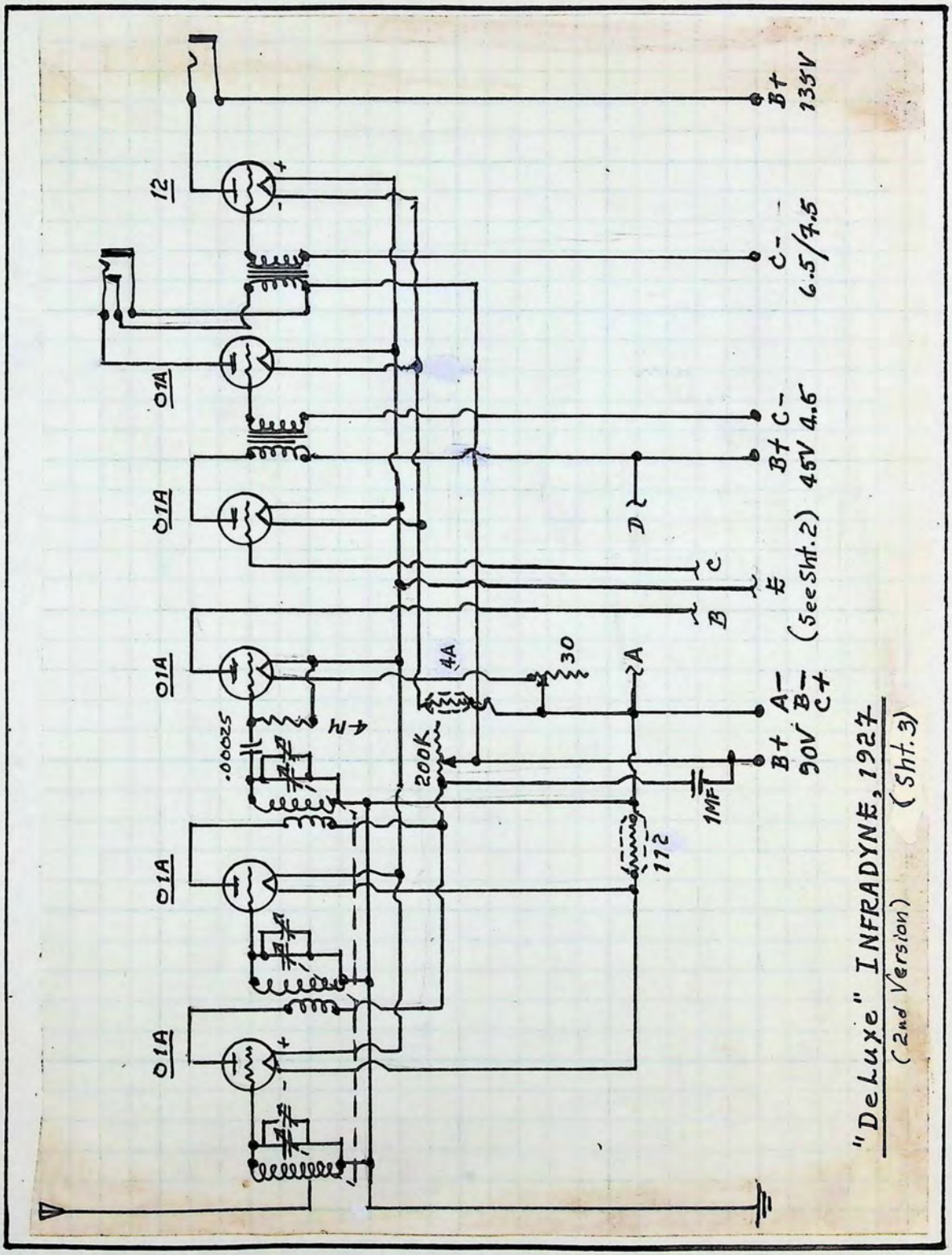
12
01A
01A
01A
01A
01A
.00025
4H
200K
4A
30
172
1MF
A
B
C
D
B+ 135V
C- 6.5/7.5
B+ C- 45V 4.5
E (See Sht. 2)
B+ A- 90V B- C+
"DeLuxe" INFRADYNE, 1927
(2nd Version) (Sht. 3)

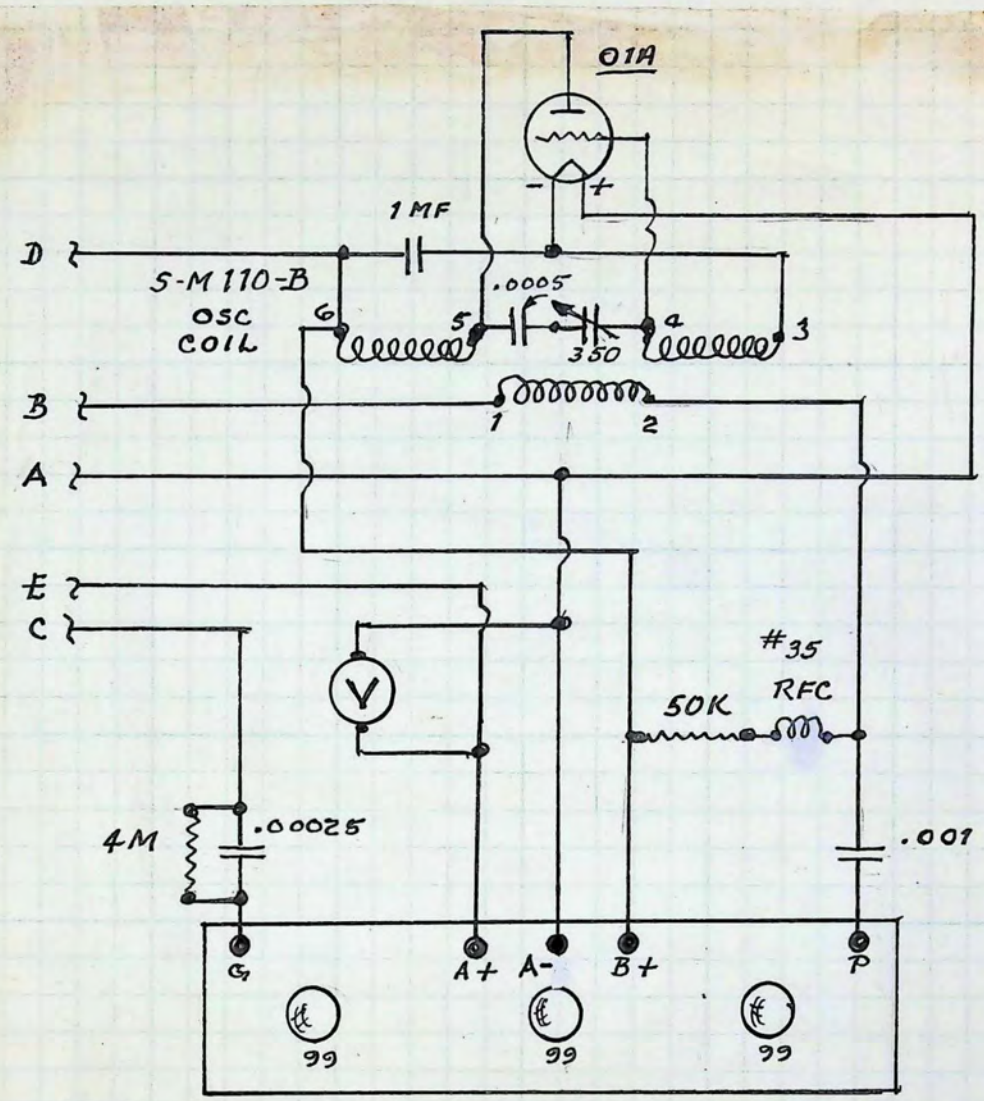

OPTIONAL
OSCILLATOR & "Infradyne"
HOOK-UP

OSC Coil = Remler 620
Camfield 620
S-M 110-B

"DeLuxe" INFRADYNE
1927 – (Sht. 4)

THE REMLER "INFRADYNE 28"

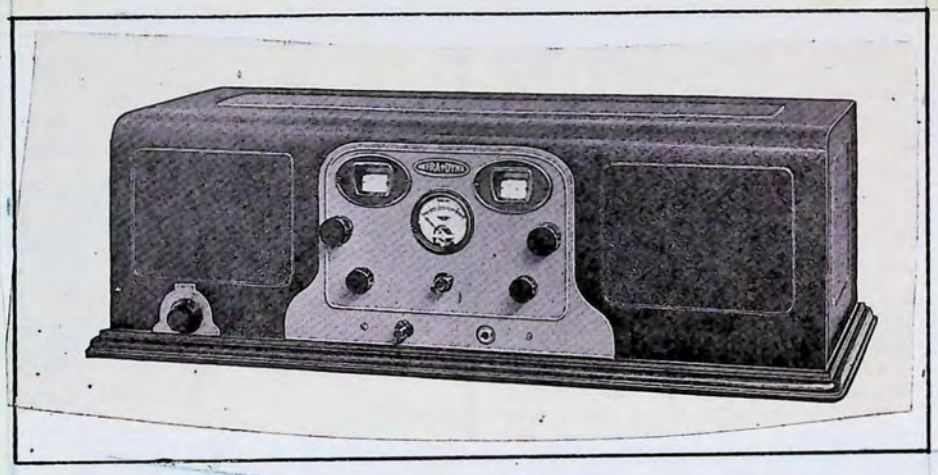

If you compare the cut above with that which follows over-leaf, you could get the impression that there were two versions of the INFRADYNE 28. There was only one, with inevitable improvements dutifully reported in the media, which you will also find detailed herein. What the above cut shows is the first configuration of the escutcheon (control panel) which almost immediately was redesigned into something a bit more arty and flowery...which, in all candour, was more aesthetically appealling. Everything else about the receiver is the same. The cut below is a true rear view.

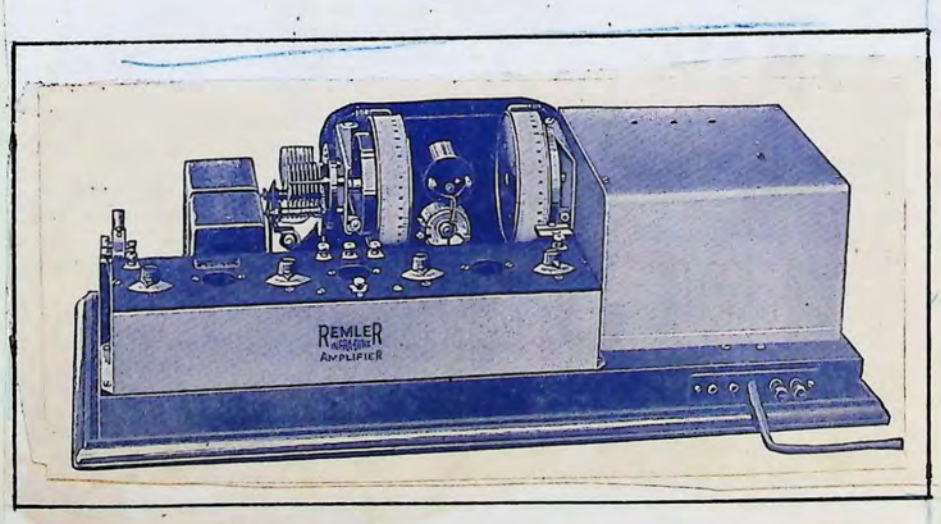

(Sht. 1)

REMELER "INFRADYNE 28" RECEIVER, 1928

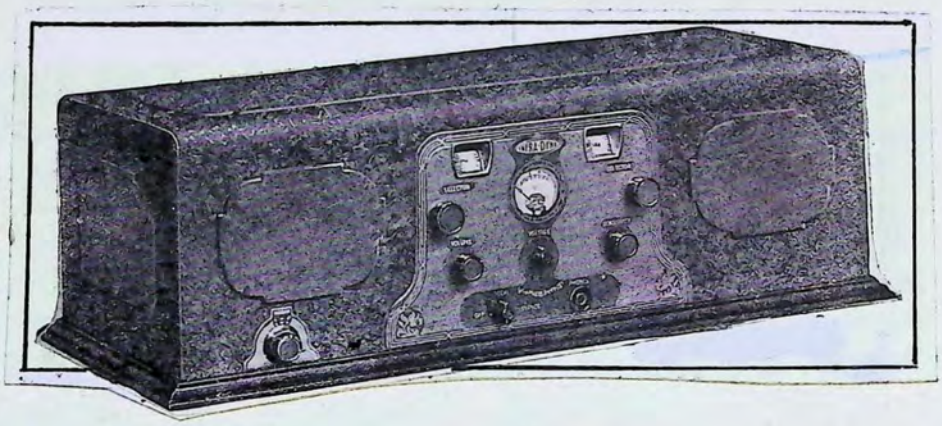

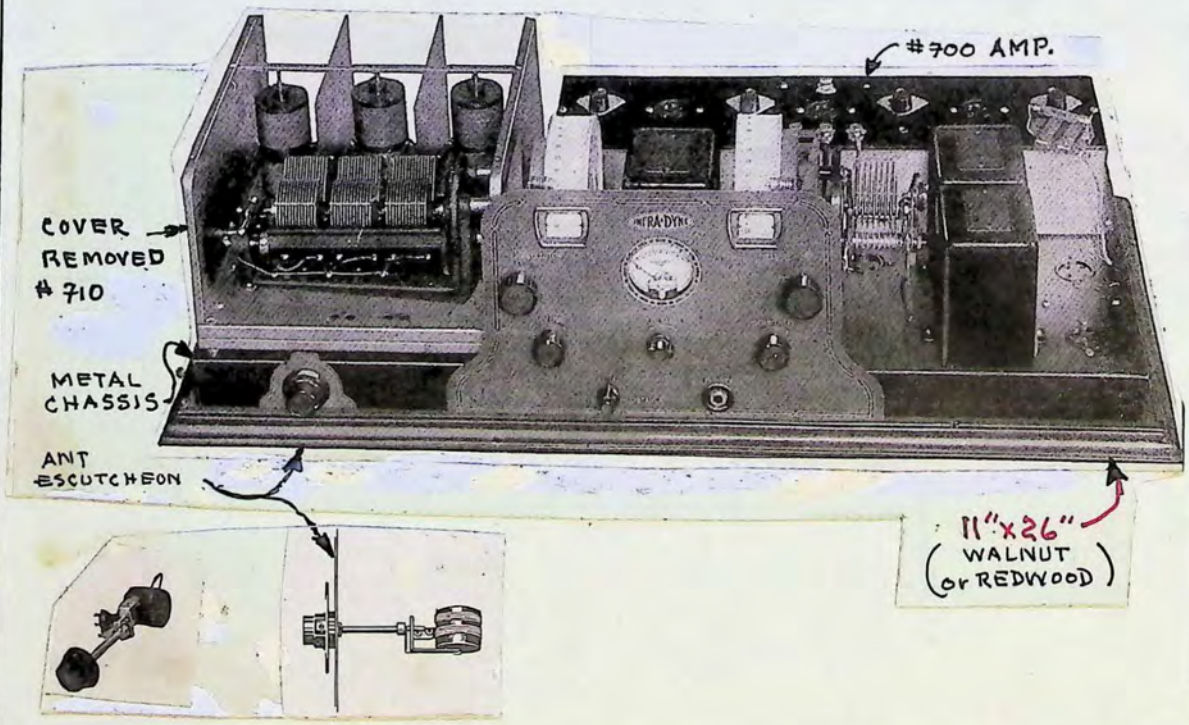

(Sht. 2) REMLER "INFRADYNE 28" RECEIVER, 1928

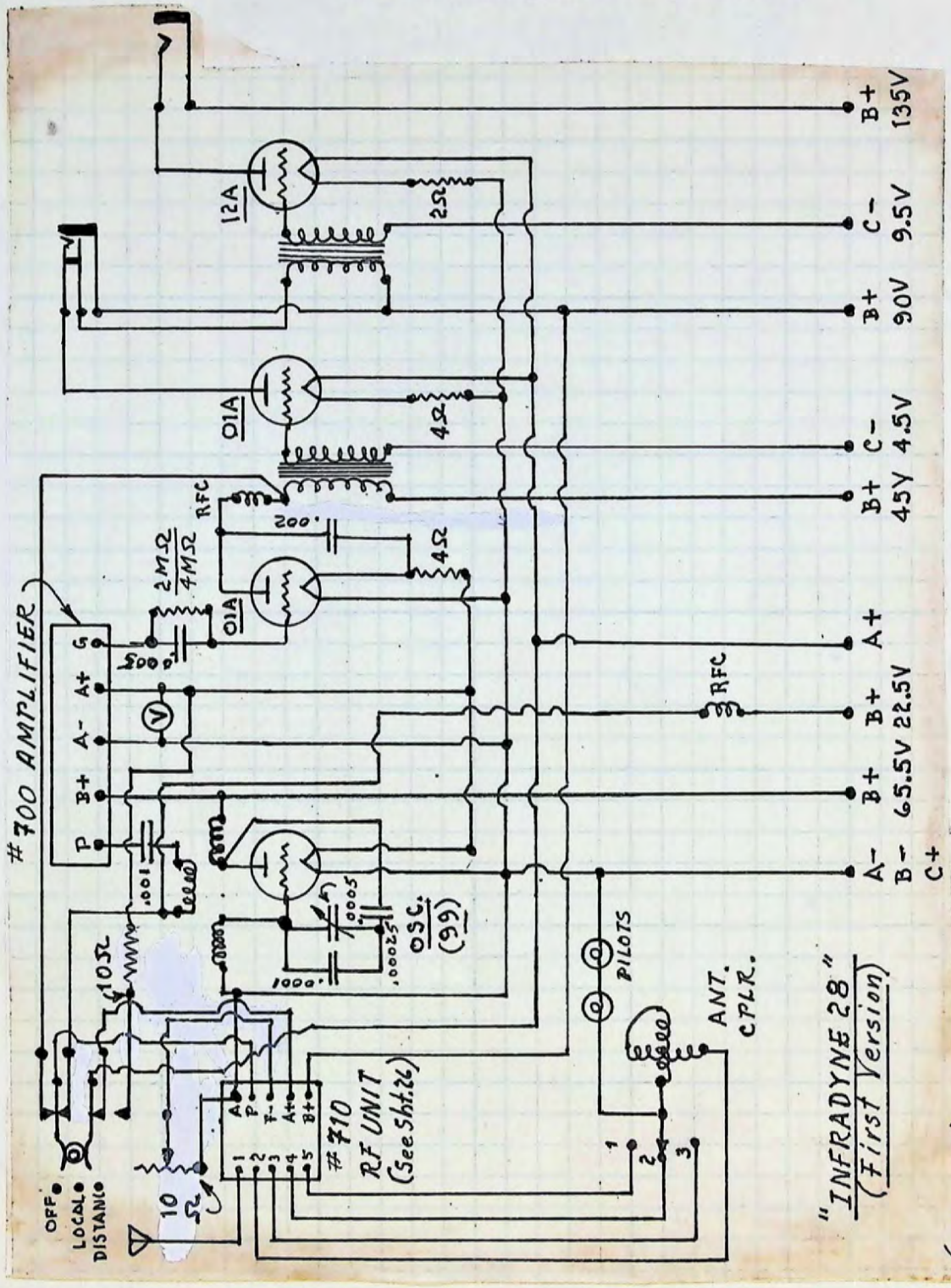

(Sht. 3) REMLER "INFRADYNE 28" RECEIVER, 1928

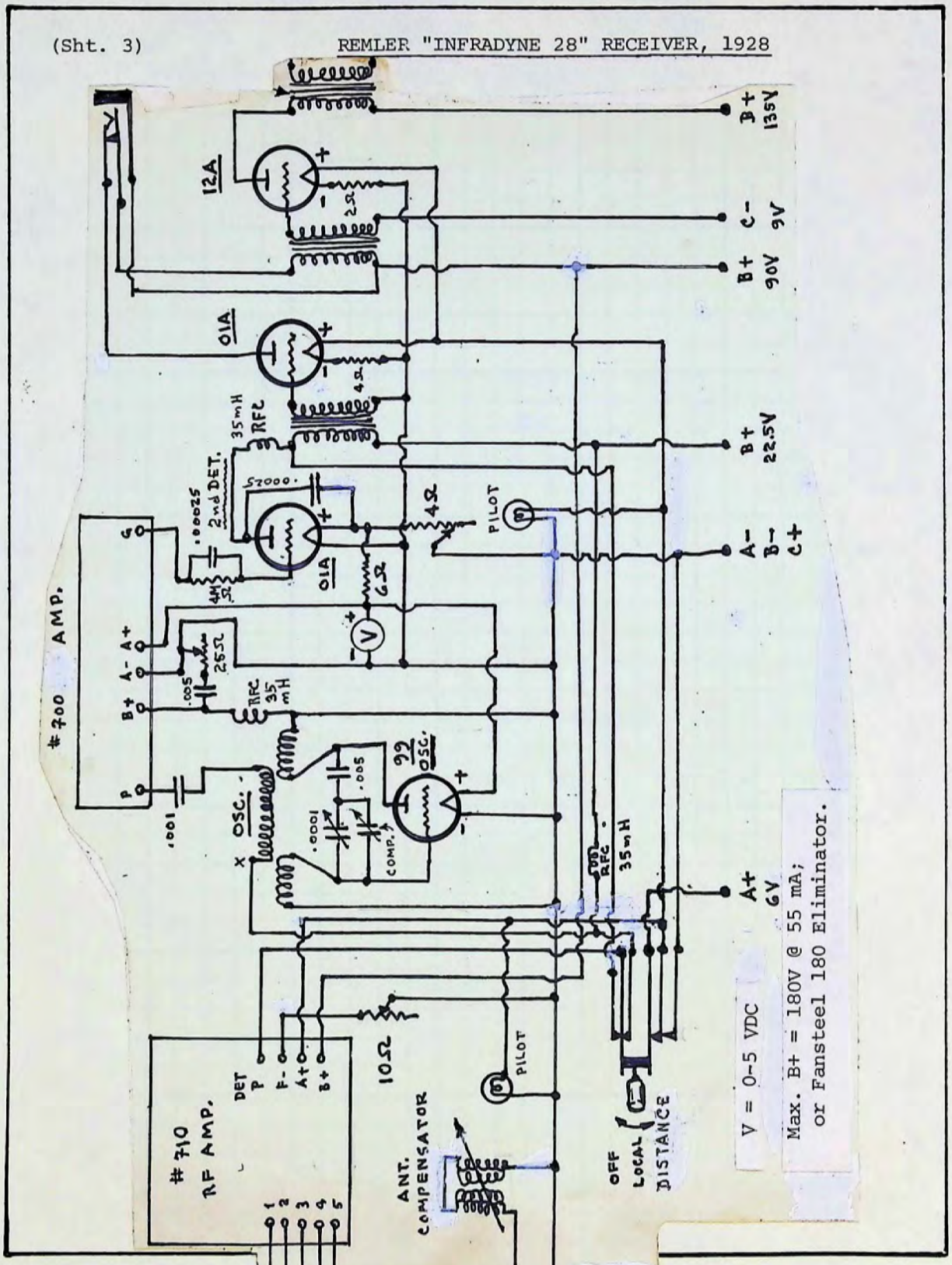

REMLER "INFRADYNE 28" Model 710 RF AMPLIFIER: 1st & 2nd VERSIONS

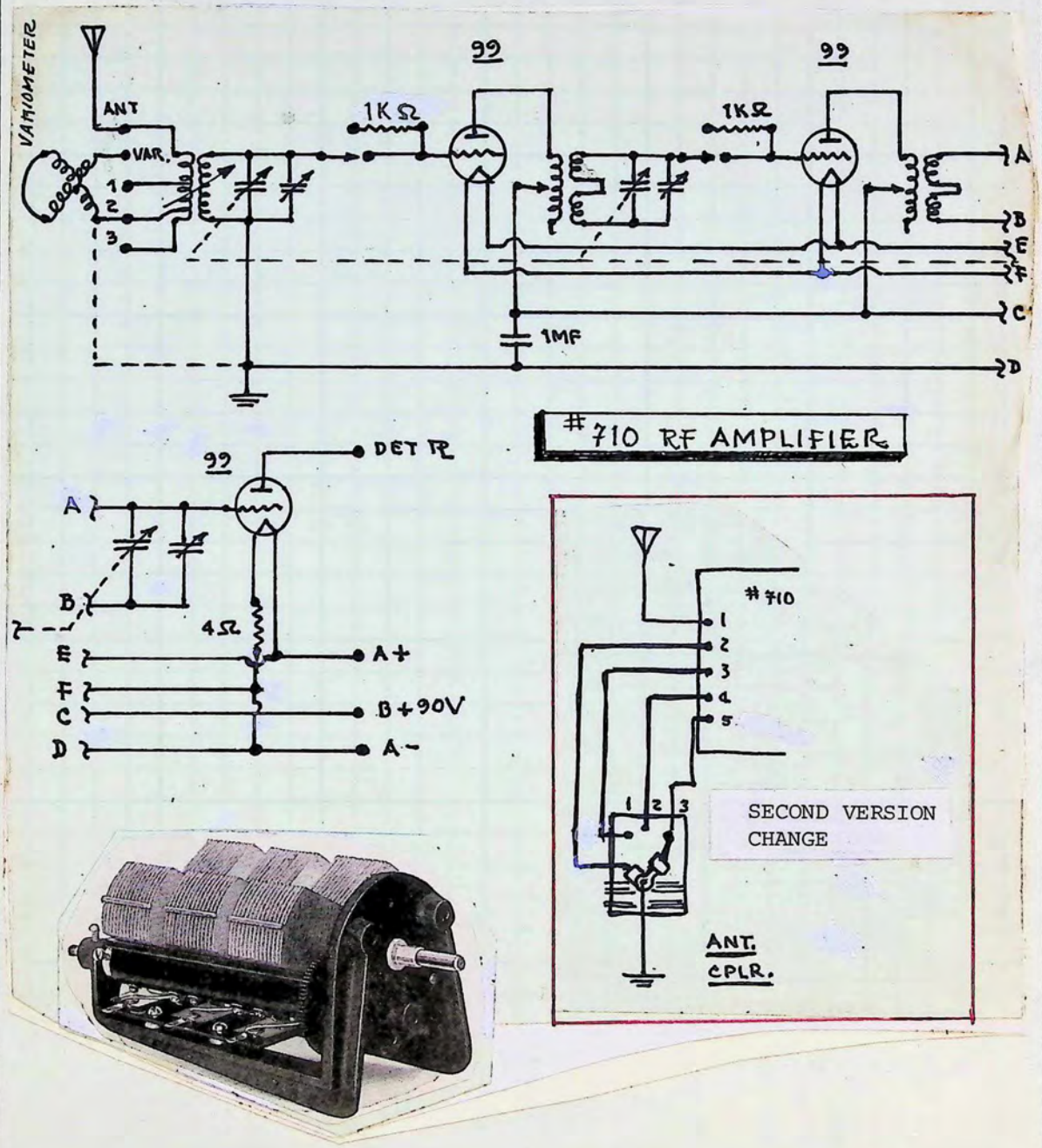

(Sht. 5) REMLER "INFRADYNE 28" RECEIVER, 2nd VERSION

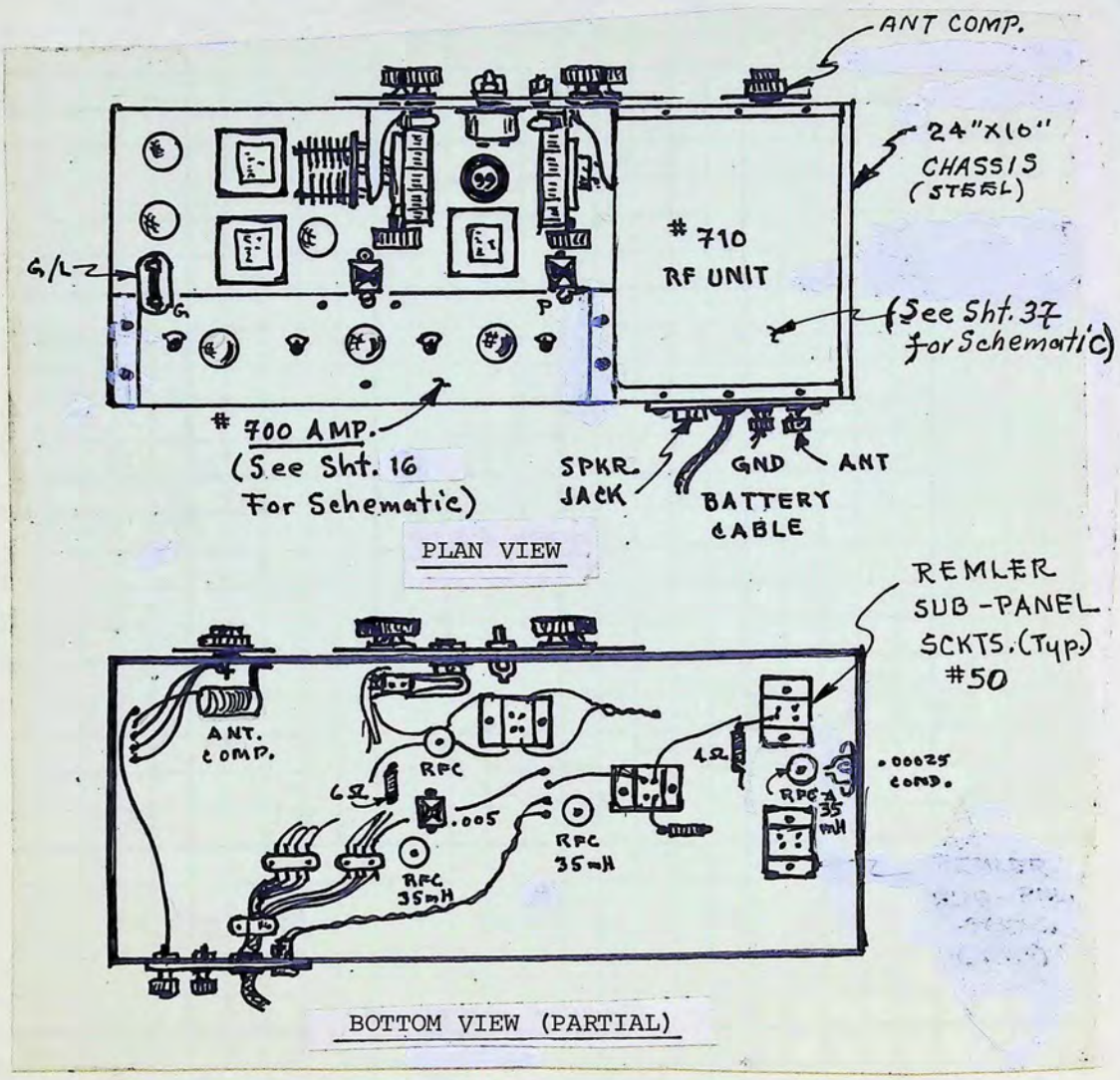

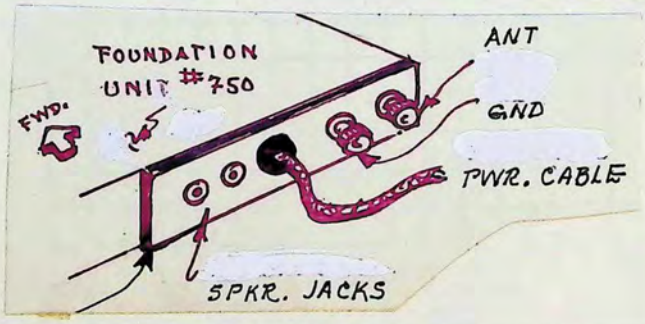

(Sht. 1)

"INFRADYNE 28" OPERATING INSTRUCTIONS

1. Turn switch "S" to LOCAL; all valves except the 99s and 01A @ extreme RH of base should light.

2. Pilot light over LH dial should light.

3. Turn Switch to DISTANCE and adjust panel rheostat M1 so that voltmeter reads 3V: all valves and pilots should light.

4. Set inner knob of ANT COMP @ 3; adjust outer knob of ANT COMP so that rotor is @ 45°.

5. LH dial should read "0" with plates of variable in high frequency amplifier fully open.

6. Turn VOL about 4/5ths ON.

7. Rotate LH dial slowly until a signal is heard, then adjust balancing condenser located across the ANT sexion of the ganged variable for level of loudness.

8. Fasten down cover of RF amplifier unit #710.

9. Turn RH dial to 100, with plates of variable fully open.

10. Turn the four tuning controls of unit #700 to "0"(insulated tool).

11. Turn INCREASE screw about 2/3rds down, using fingers only.

12. Turn switch to DISTANCE and set LH dial for a station in the middle range.

13. Set SENSITIVITY @ a point just beyond where a series of whistles is heard as the RH drum is turned.

14. Adjust INCREASE screw to where whistles disappear when the SENSITIVITY control is advanced about 1/3rd of its range.

15. Rotate RH drum until station for which LH drum is set, comes in.

16. Adjust #3 control on unit #700 for maximum signal; leave #2 at "0"; rotate #1 control for loudness, then #4.

17. Trim with #2 control while rocking RH drum.

(Sht. 2) "INFRADYNE 28" OPERATING INSTRUCTIONS

18. As proper settings are found, a whistle will be heard as the station is passed: reduce SENSITIVITY until it ceases.

19. When switch is in LOCAL position, only the LH drum and VOL are used.

20. When switch is in DISTANCE position, SENSITIVITY control and both dials and VOLUME control are in use.

21. Voltmeter should always indicate 3V.

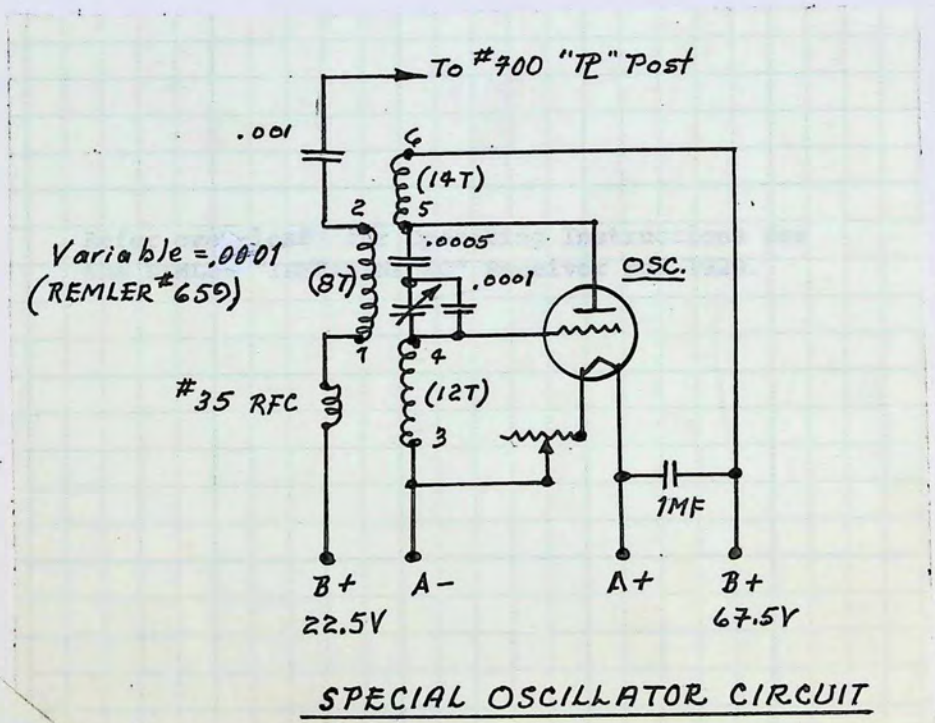

SPECIAL OSCILLATOR CIRCUIT

REMLER AUDIO AMPLIFIER SYSTEM, 1928

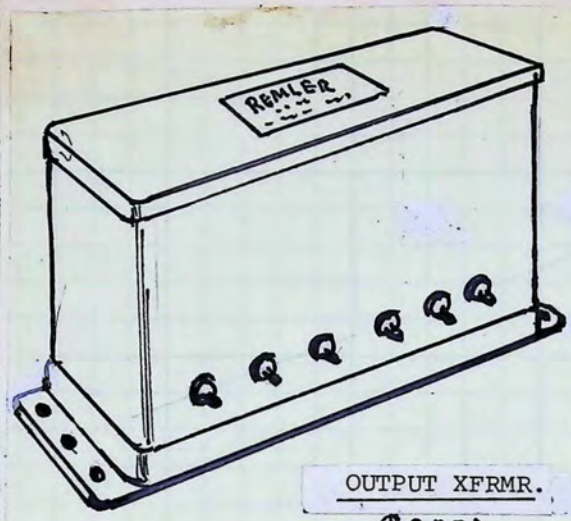

OUTPUT XFRMR.
(#923)

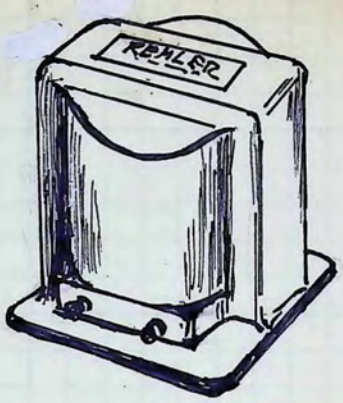

AF XFRMRS.
(#900 Series)

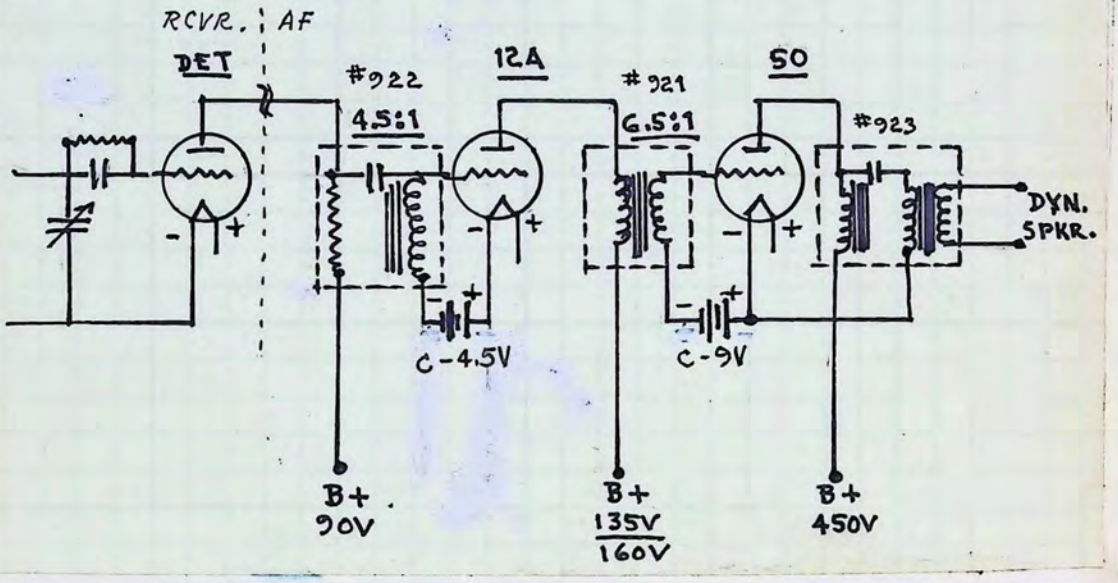

REMLER's 900 SERIES UNITS

1. #900, 3.5:1 2nd Stage AF Xfrmr; $8.
2. #901, 3.5:1 1st Stage AF Xfrmr; $8.
3. #920, Resonated PRI Xfrmr.; $12.
4. #921, Special 6.5:1 AF Xfrmr.; $10.
5. #922, Output Xfrmr. for 12A, 71A, 10; $10 (40mA).
6. #923, Impedance Coupled AF Output, $20 (100 mA).

"INFRADYNE" OPERATING INSTRUCTIONS
FIRST & SECOND VERSIONS

OPERATING INSTRUCTIONS

1. Connect 6V "A" battery to set.
2. Turn FIL switch to OFF position.
3. Insert 01A tubes in the 2 RF amplifier, DET, 1st AF sockets.
4. Insert 99s in #700 Amplifier unit.
5. Turn 30-ohm rheostat full on.
6. Turn rheostat on baseboard to half-way position.
7. Turn FIL switch ON; all tubes should illuminate.

CAUTION

DO NOT TURN 99 TUBES UP HIGHER THAN 3V.

8. Connect batteries, Ant, and GND leads.
9. Set the 4 indicators knobs on #700 unit to Zero.
10. Turn INCREASE screw down half-way.
11. Turn baseboard rheostat full on.
12. Turn OSC variable to minimum capacity; tighten dial set-screw with dial reading 170°.
13. Turn both dials simultaneously and listen for signal.
14. Leave ANT variable at that setting where a signal is heard; rotate OSC variable for loudest setting. This will be the INFRADYNE setting.
15. Turn dial Plate resistance of first 2 tubes for proper level.
16. Using an insulated tool, reset all 4 indicator knobs on the #700 Amplifier unit for maximum signal.

NOTE:

If this throws the Amplifier into oscillation, loosen INCREASE screw until oscillation stops. If if does not throw Amplifier into oscillation, tighten INCREASE screw until it does. If oscillation occurs, back off just enough to kill it. If nothing occurs, remove B+ wire from terminal post and connect a coil of 8 turns of wire, 3/8" diameter, in series between coil and B+ post. Do NOT use more than 8 turns for the coil.

17. Turn baseboard rheostat for most sensitive FIL temperature for mixer tube - indicated by a sharp rise in signal strength at the most efficient point.
18. If rotating baseboard rheostat throws set into oscillation, refer back to NOTE above.
19. OSC variable shaft is not connected electrically to either set of plates of the variable condensers.

"INFRADYNE" AMPLIFIER "Unitone Symphonic", 1928

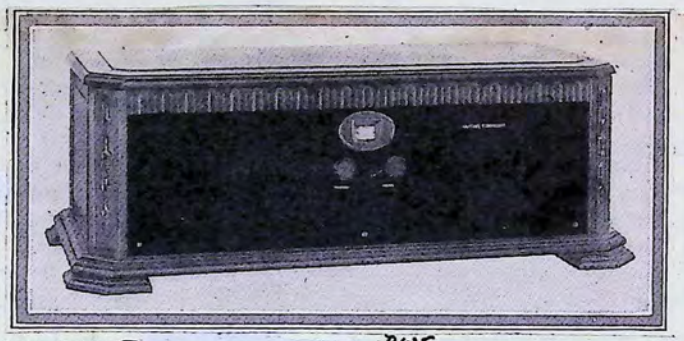

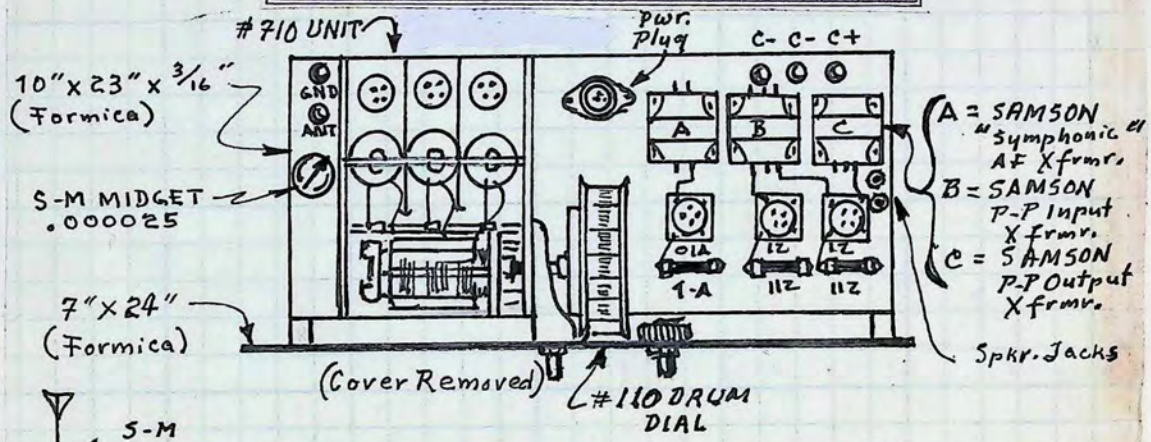

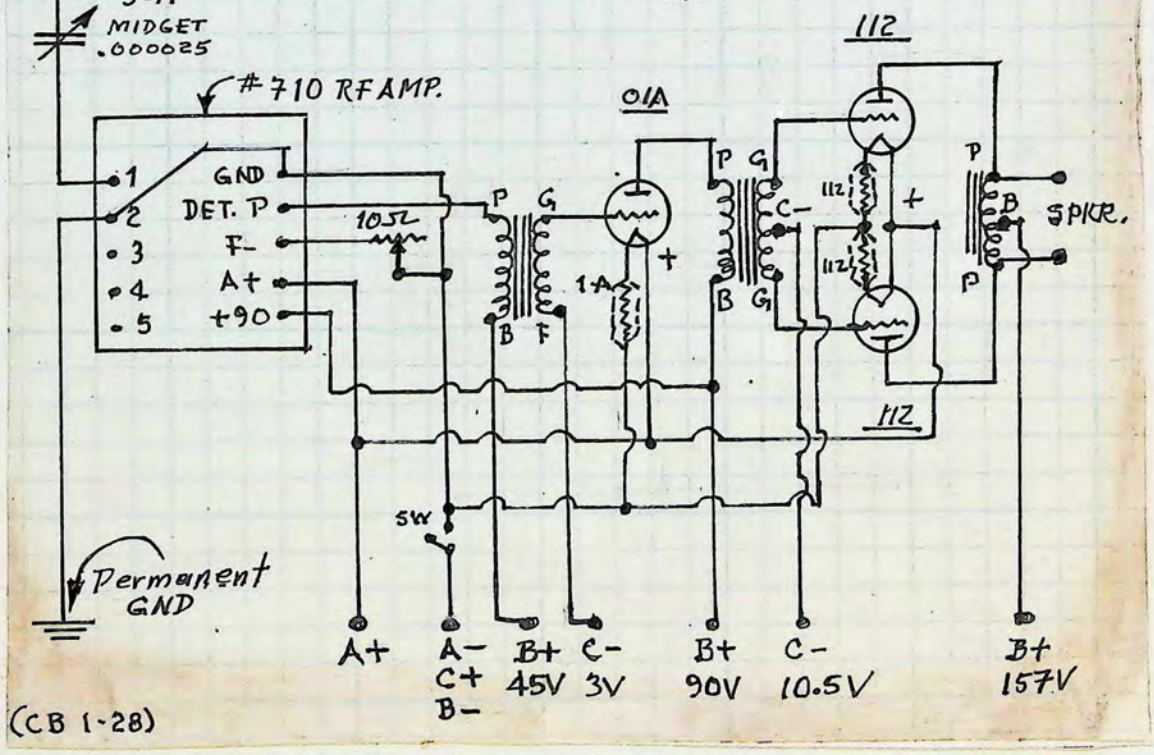

(CB 1-28)

"INFRADYNE 29" SECOND VERSION CHANGES

1. Amperite for the 99 OSC removed; now controlled by the rheostat controlling the #700 amplifier unit.

2. Original Continental variables replaced with either Hammarlund or Cardwell.

3. Panel 500K pot replaced with a 200K pot.

4. Rheostat on left side of panel (10K) removed and replaced by a #112 Amperite.

5. Panel 10-ohm rheostat replaced by a 50K pot.

6. Amperites removed from DET, 1st AF, 2nd AF tubes; a #1 Amperite installed to control all three tubes.

7. Baseboard component placement re-arranged.

8. The OFF position of the 50K pot is for cutting out strong stations.

9. Terminal board replaced by a 7-wire cable and plug, Jones, Yaxley, Frost, Hagel, etc.

10. The panel layout remains the same.

* * *
* *
*

44

(Sht. 1) REMLER 45 KC. SUPER-HET RECEIVER, 1927

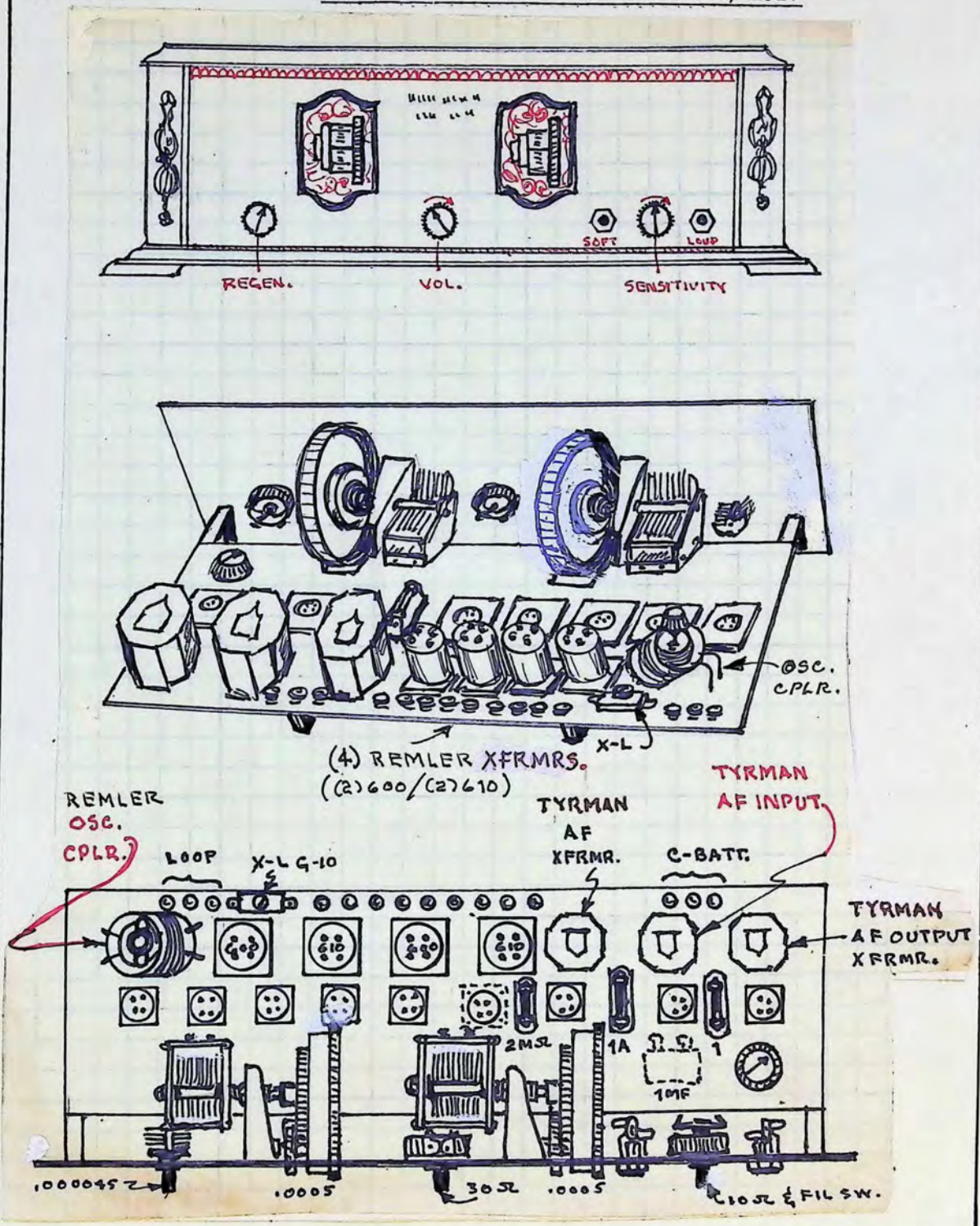

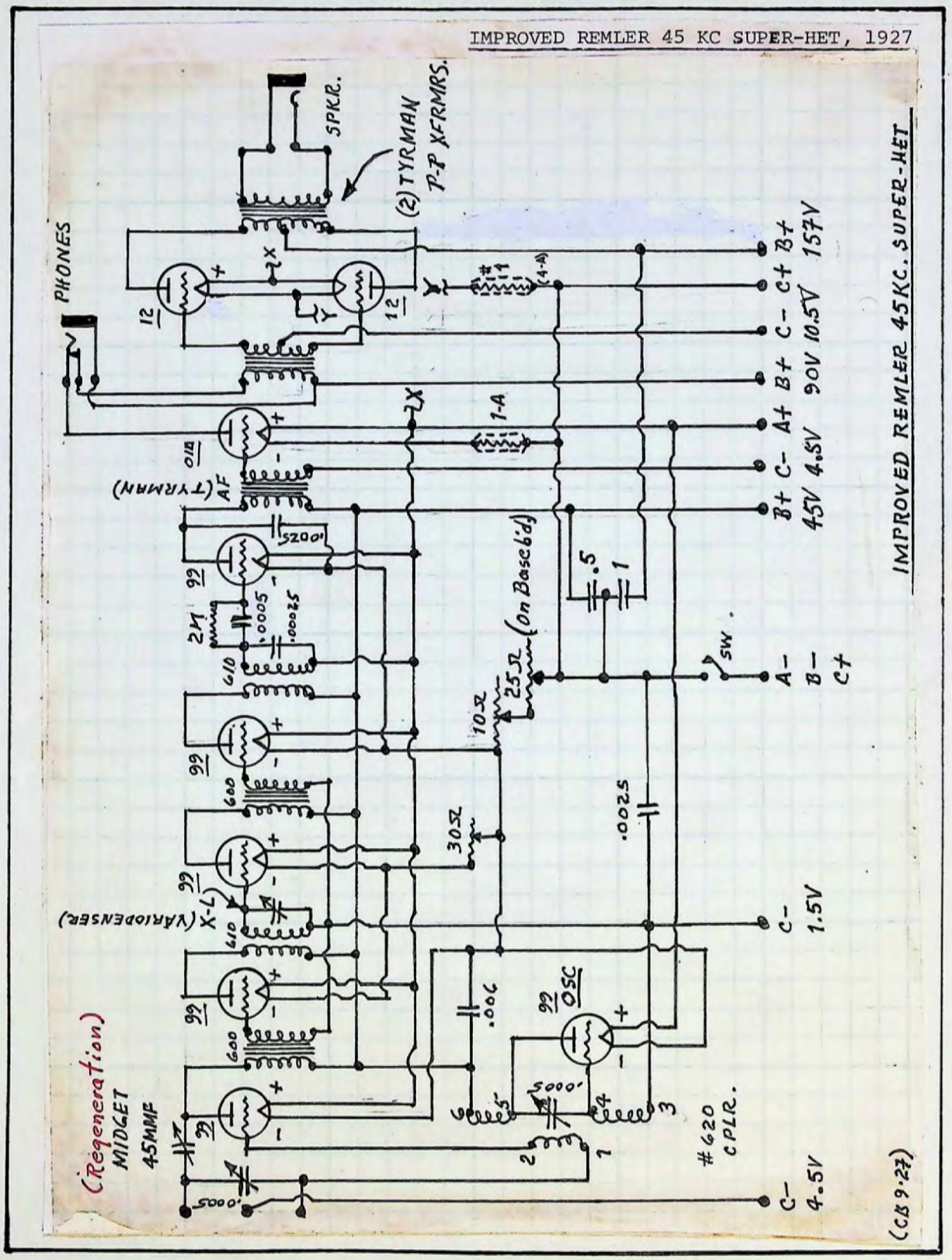
IMPROVED REMLER 45 KC SUPER-HET, 1927
IMPROVED REMLER 45KC. SUPER-HET
(CB 9-27)
PHONES
SPKR.
(2) TYRMAN P-P XFRMRS.
(TYRMAN) AF
(VARIODENSER) X-L
(Regeneration) MIDGET 45MMF
#620 CPLR.
OSC
(On Baseb'd)
SW.
B+ C- A+ B+ C- C+ B+
45V 4.5V 90V 10.5V 157V
A- B- C+
C- 1.5V
C- 4.5V

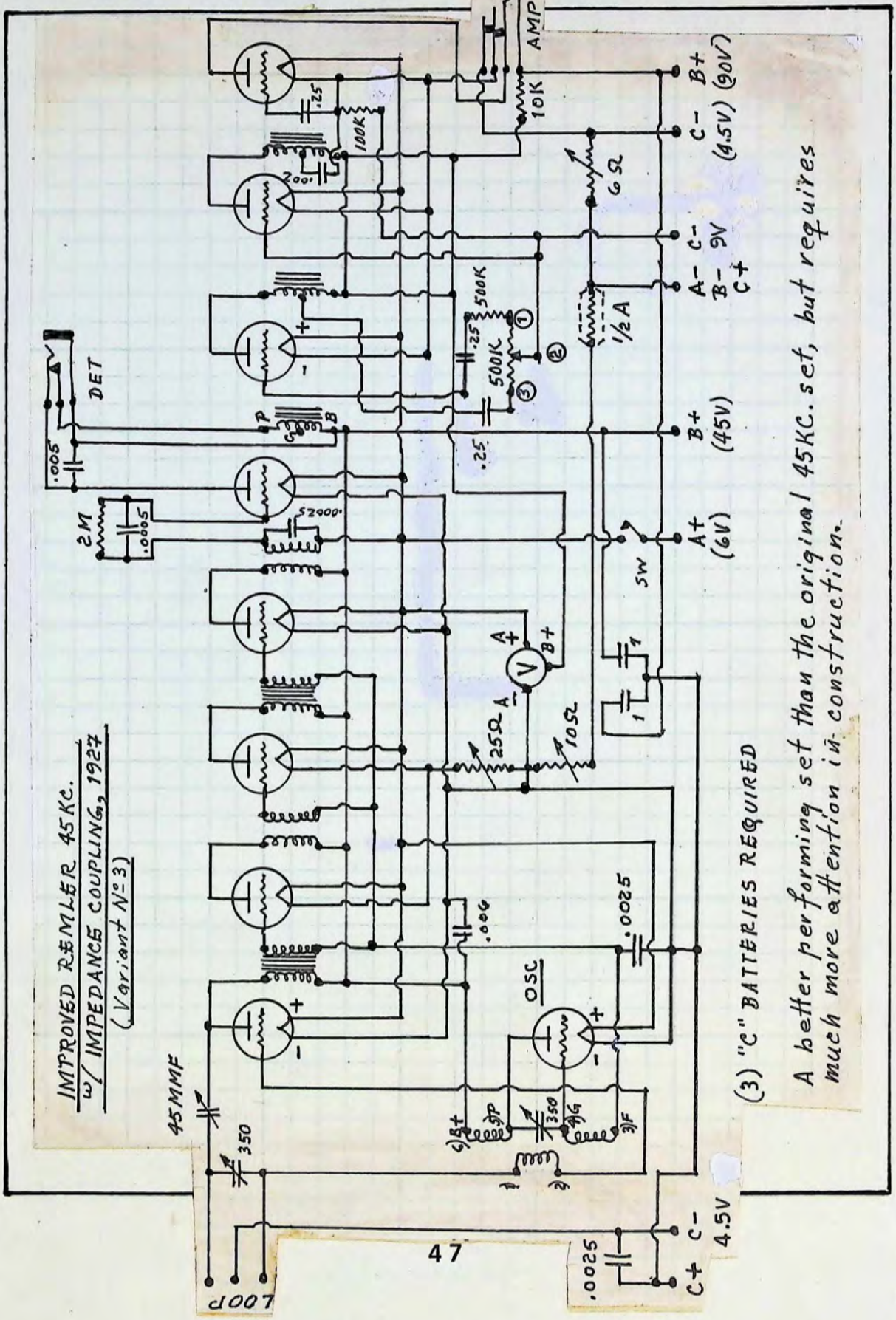

(3) "C" BATTERIES REQUIRED

A better performing set than the original 45KC. set, but requires much more attention in construction.

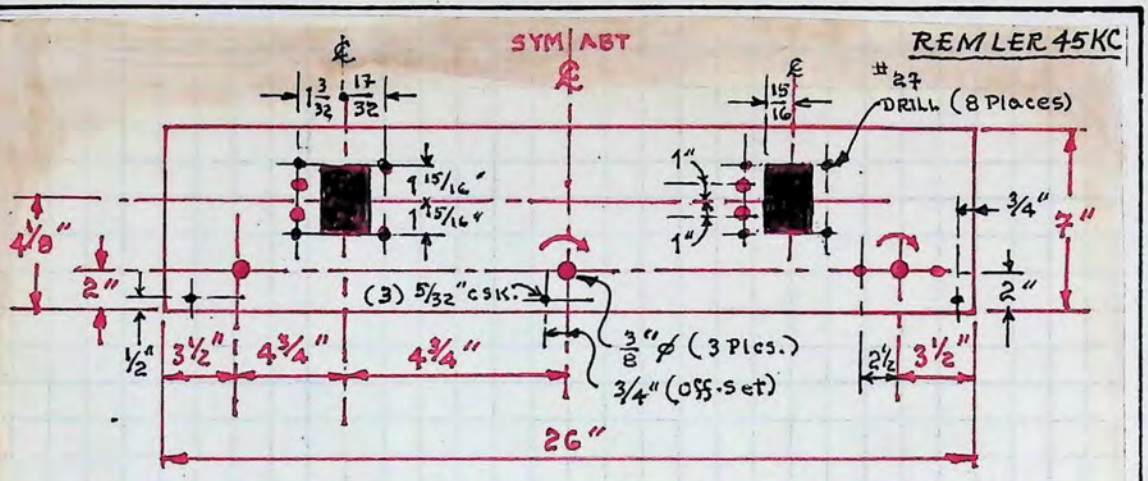

PANEL DRILL TEMPLATE

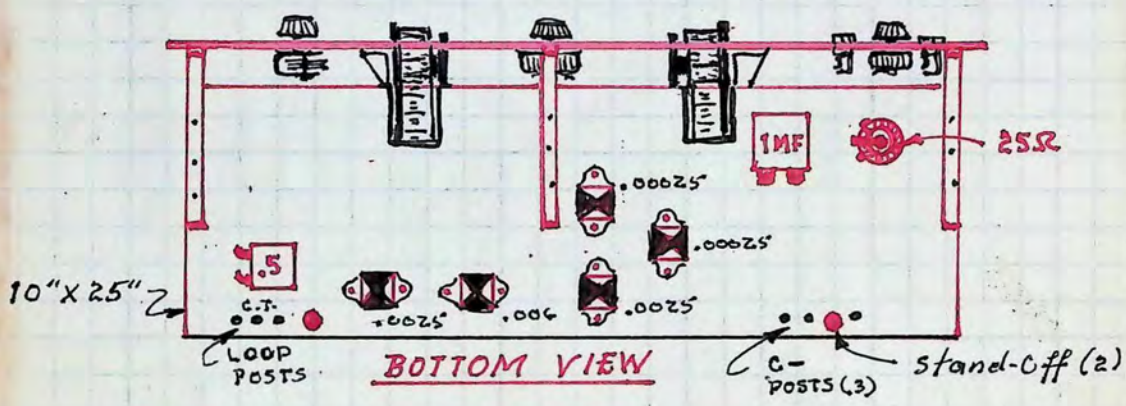

BOTTOM VIEW

PARTS LIST

1. 30Ω Rheostat & FIL Switch Combined unit.
2. FROST #537 Sockets (8).
3. BENJAMIN #9044 Socket (1).
4. X-L "Variodenser", Model G-10.
5. TYRMAN Drum Dials; AF Xfrmr.; P-P Xfrmr.
6. KARAS Sub-Panel Brackets (3).
7. Panel & Sub-Panel Were MICARTA, 3/16" Thick.
8. Original Tubes Were SONATRON.
9. CAMFIELD Variables .0005 MFD (2).
10. All Other Hardware Was Conventional.
11. Two Seperate C-Batteries Required.

(CB 9-27)

OPERATING INSTRUCTIONS FOR THE 45 KC. SUPER-HET

Preliminary Tests:

Checking out the wiring of the REMLER 45 KC. set is done in the conventional way of turning on the FIL switch, after making sure power is off all other cables, and touching the A+ and A- wires where they connect to each socket in turn. Tubes should light. Remove the FIL cables, and touch all B+ cables, one at a time, to their respective posts. Tubes should not light. If they do, there is a short somewhere in the wiring, and must be corrected before proceeding. If tube does not light, turn power switch OFF and connect all battery cables. Connect the C+, A-, B- leads together at the battery post.

Adjustment & Operation:

1. Connect a 3-point Loop to the loop posts.
2. Advance rheostat until meter reads 3V.
3. Set Midget Variable to full mesh position.
4. Operate both dials together.
5. Turn VOL all the way up for background noise.
6. When a signal is heard, decrease VOL.
7. Retard SENSITIVITY control for local reception.
8. For maximum sensitivity and fidelity, VOL control should be turned CW to just below point of oscillation.
9. The REGENERATION control and "Variodenser" should be tweeked for best over-all reception. If a signal is heard at two points on the dials, it means that these controls have not been set properly.
10. DO NOT ATTEMPT TO DRIVE THE 99 TUBES BEYOND 3V! In fact, a steady voltage of 2.9V would be most feasible.

NOTE

The Operating Instructions for the INFRADYNE 29 detailed in preceding pages, may aid you in operating the REMLER 45 KC. set, as they are similar in many respects.

* * *
* *
*

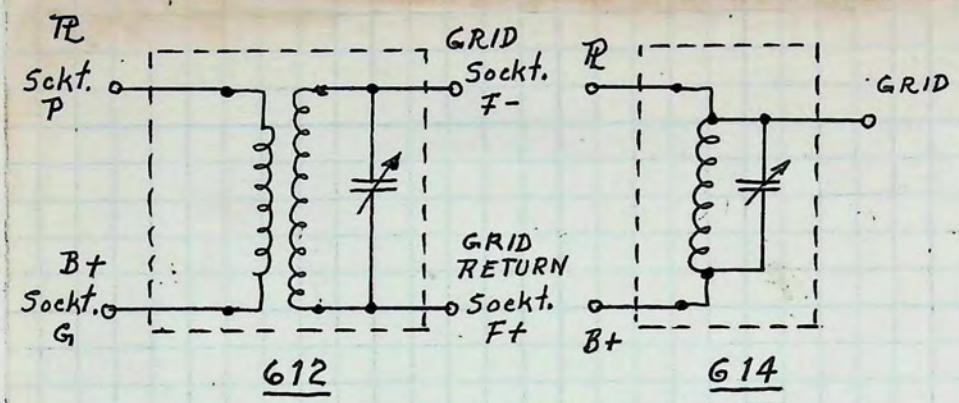

REMLER RF XFRMR. CONNEXIONS

Used in the REMLER 45 KC and the BEST 115 KC kits, replacing original TYRMAN transformers in some kits of the REMLER 45 KC set.

REMLER plug-in Inductances #550, 562, 564 in the BEST kit had internal trimmers.

#550 = PRI 40 Turns
564 = PRI 250 Turns
562 = PRI 250 Turns (equipt w/ 3rd Winding)

PRI of all coils was removable and interchangeable, replaceable w/ any desired size of PRI to suit conditions of installation.

Trimmers for #612 and #614 xfrmrs. located in the top of each Bakelite casing.

Refer to REMLER 29 S.G. Sketches for use of the RF and IF plug-in coils.

* * *
* *
*

REMLER 45 KC SUPER-HET NOTATION

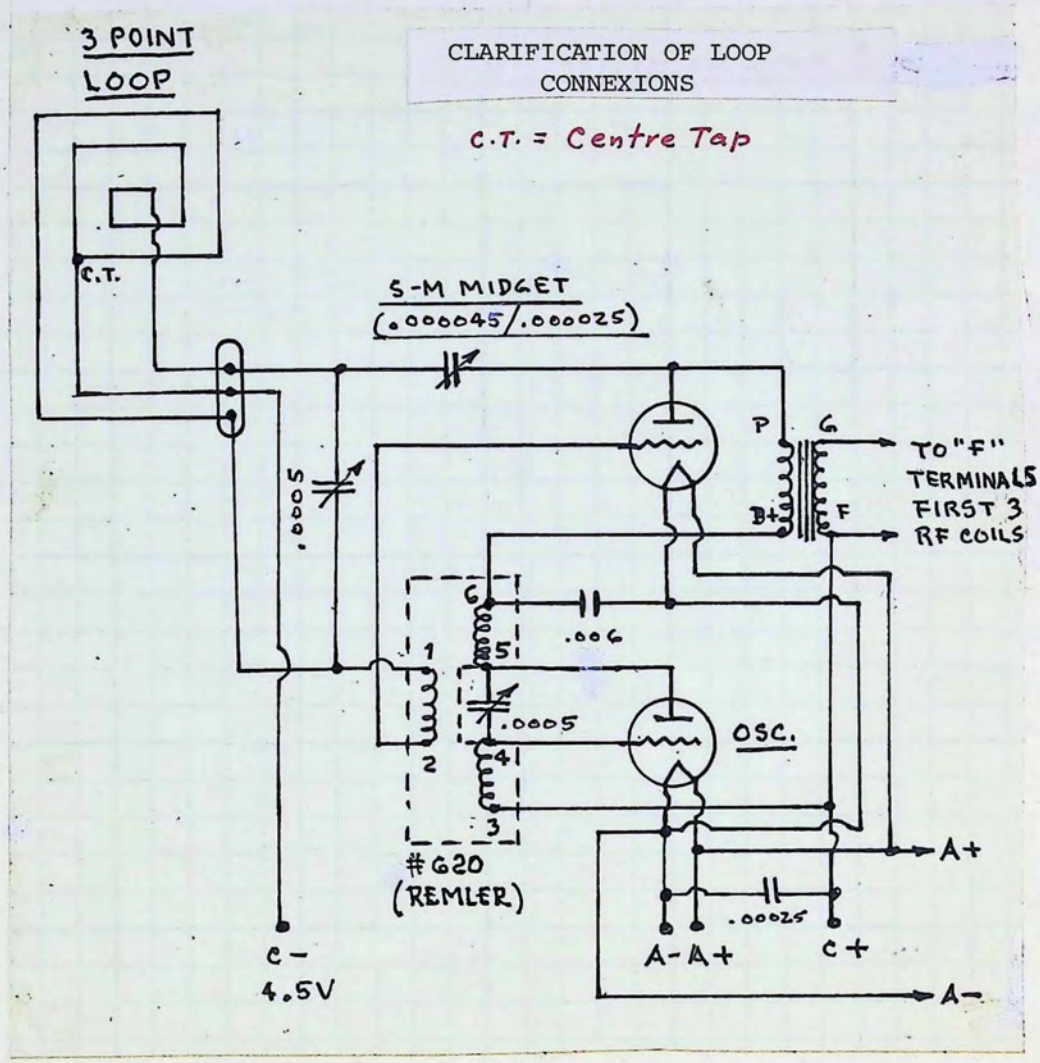

BEST 45KC SUPER-HET, 1926: Sht. 1

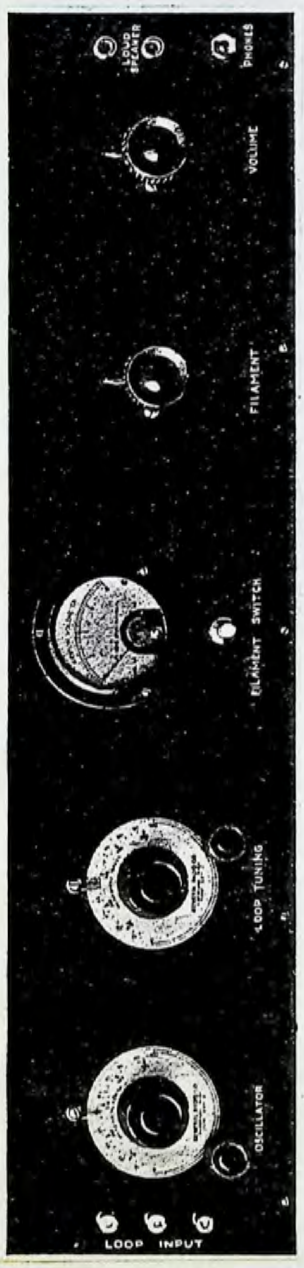

Reproductions of the original photographs used by Best to illustrate his initial article in RADIO, the San Francisco-based magazine, and where Best was living at the time, before joining Remler in Oakland.

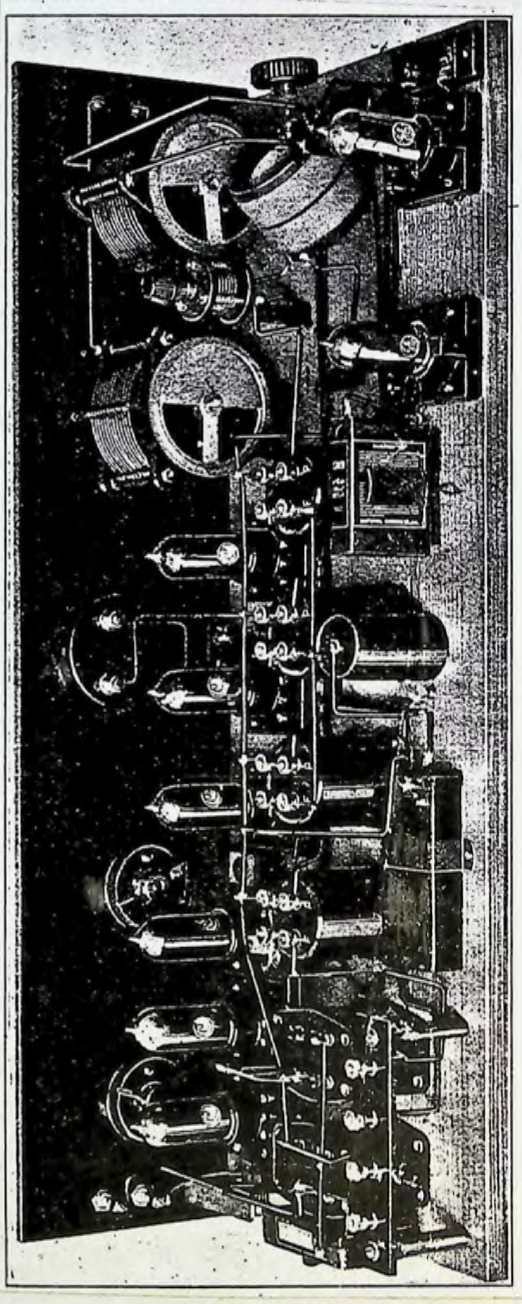

52

BEST 45KC SUPER-HET, 1926; Sht. 2

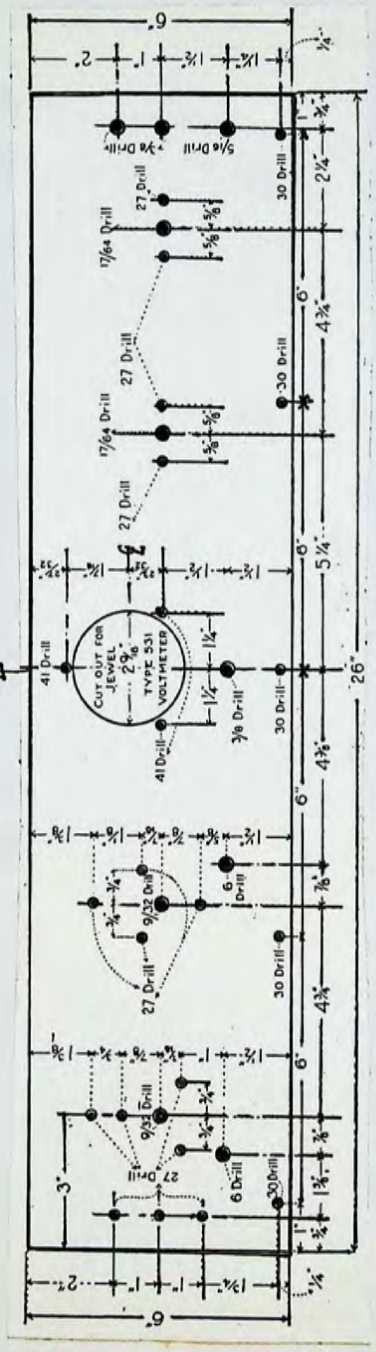

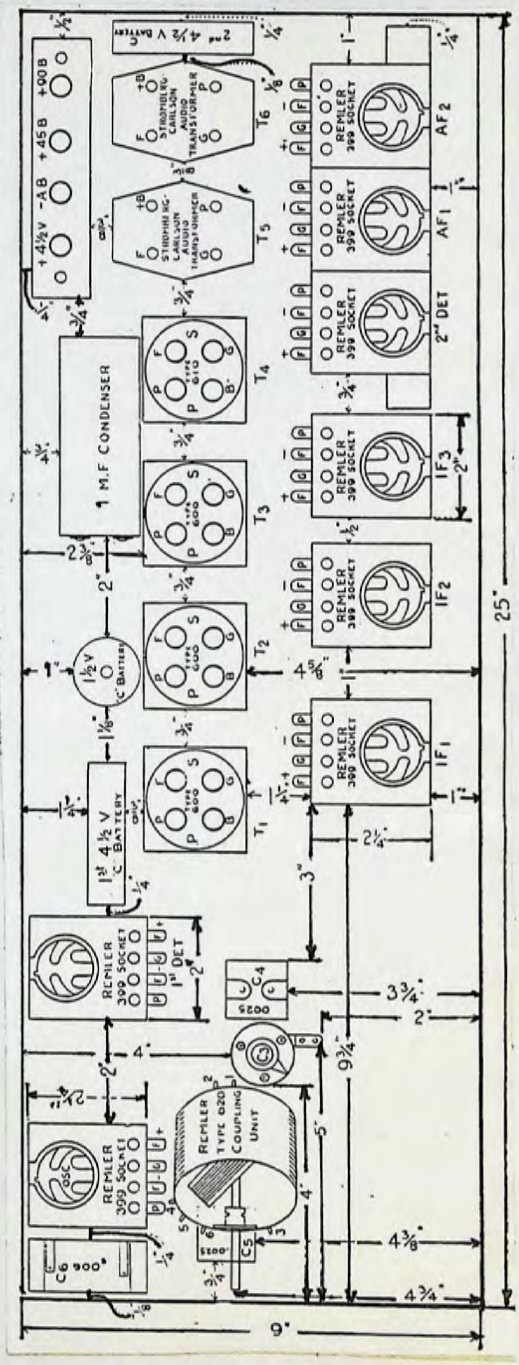

BEST's original drawings for drilling the panel and the baseboard layout. You will note that Best seemed to have his own drafting conventions: I have filled-in his myriad of dotted limit lines for clarity. His dimenisions hold for the components he listed.

BEST 45KC SUPER-HET, 1926; Sht. 3

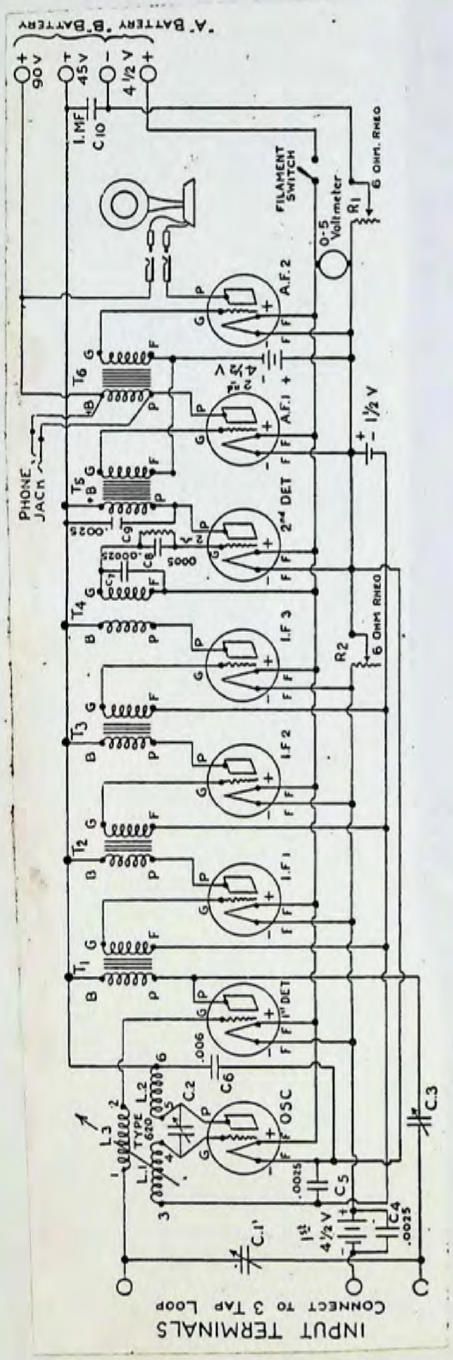

SUGGESTED LIST OF PARTS

Number Required	Manufacturer Type Number	Article	Circuit Designation	List Price Each	List Price Total
3	Remler Type 600	Intermediate Frequency Transformers	T_1, T_2, T_3	$6.00	$18.00
1	Remler Type 610	Tuned circuit transformer	T_4	5.00	5.00
1	Remler Type 620	Coupling Unit	L_1, L_2, L_3	3.00	3.00
8	Remler Type 399	Sockets	Sockets for Tubes	.75	6.00
2	(See text)	AF Transformers	T_5, T_6	4.50	9.00
2	General Radio 247A	Condensers	C_2, C_3	5.00	10.00
1	Chelten	Midget Condenser	C_1	1.00	1.00
1	Jewell or Weston	Voltmeter	O-5V. Voltmeter	7.50	7.50
1	Cutler-Hammer	Radio Switch	Filament switch	.60	.60
2	Federal 18	Rheostats	R_2, R_1	1.10	2.20
1	Frost No. 133 or Federal	Open Circuit Jack	Phone Jack	.60	.60
1	Federal No. 131	1 mf. Fixed Condenser	C_{10}	1.50	1.50
1	Dubilier No. 600	.006 mf. Fixed Condenser	C_6	.75	.75
1	Dubilier No. 601	.0005 mf. Grid Condenser with Grid Leak Mounting	C_8	.45	.45
1	Dubilier No. 601	.00025 mf. Fixed Condenser	C_7	.35	.35
3	Dubilier No. 601	.0025 mf. Fixed Condenser	C_4, C_5, C_9	.40	1.20
1	Radiotron 2-3 megohm Grid Leak	Grid Leak	2 Megohms	.35	.35
2	Union	Phone Tip Jacks	For loud speaker	.25	.50
7	Any standard type	Binding Posts	For loop and battery terminals	.05	.35
1	Eveready 950	C Battery	1½ V	.20	.20
2	Eveready 751	C Battery	1st—4½V., 2nd—4½V	.40	.80
1		Bakelite Panel 26"x6"x3/16"	Fig. 5	3.50	3.50
30 ft.		30 ft. No. 16 or 14 tinned copper wire		.45	.45
20 ft.		Spaghetti tubing		1.40	1.40
	Material for details of special mountings, Figs. 7, 8, 9 and 10				1.00
	Material for Loop—Wood frame and bakelite winding supports		(approx.)	1.50	
	110 ft. No. 18 or 20 Standard Lamp Cord			2.75	4.25
					$79.95

BEST's 3-POINT LOOP CONSTRUCTION

The 3-point loop detailed below was designed by Best for use with his super-hets. It can be used unmodified for any other set requiring a loop rather than a wire antenna. Where a 2-point loop is called for, you simply ignore the centre tap. The loop is wound with a total of 12 turns of No. 18 silk-covered lamp-cord. The exact form shown need not be followed precisely, as long as the general diminsions and the spacing between turns, and the number of turns, is complied with. The loop will, naturally, have to be rotated from time to time, for best reception of a given signal: therefore, it should be mounted on a swivel base.

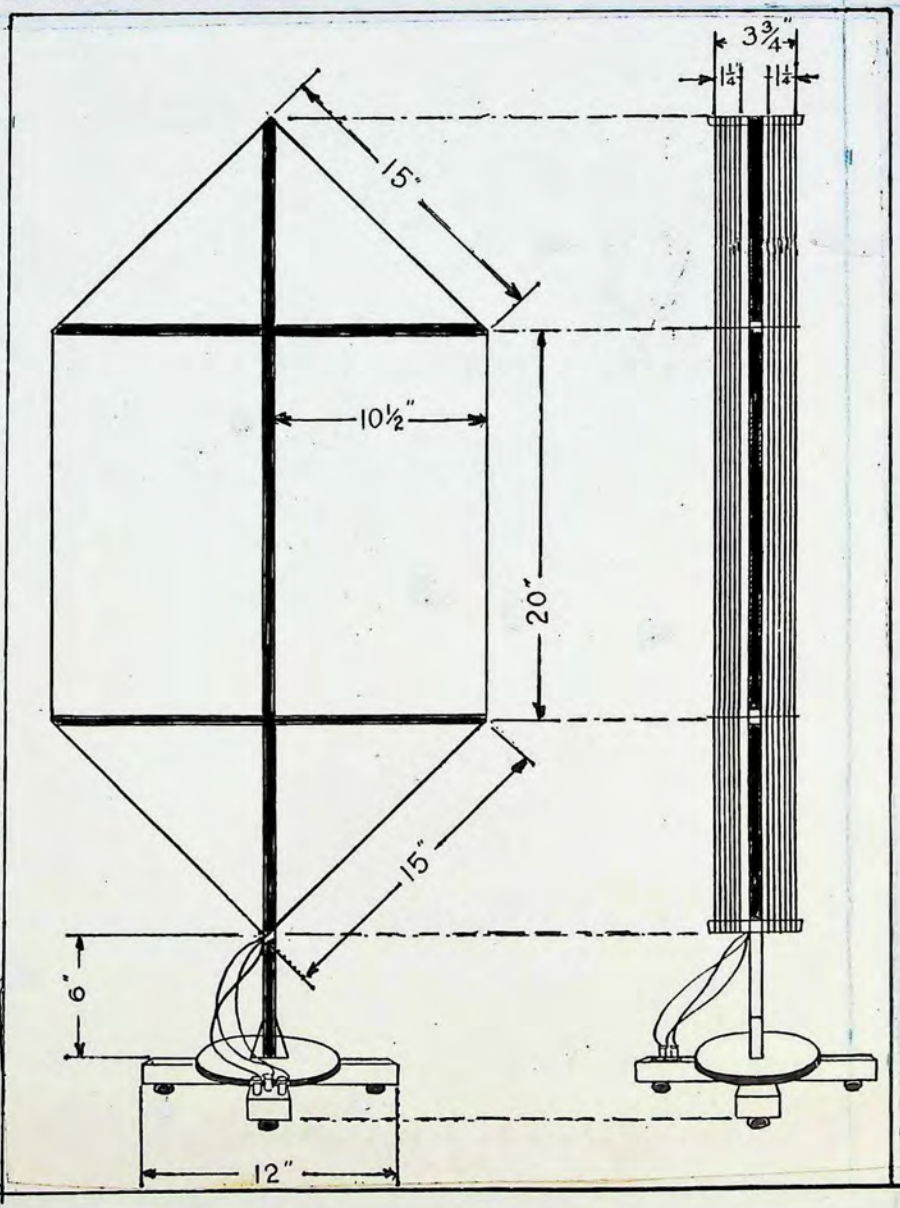

REMLER 620 OSCILLATOR COUPLER NOTES

1. Set OSC coupler rotor at mid-point of its travel.
2. Set LOOP variable to the 5° position.
3. Slowly turn OSC variable from 0° to 15°.
4. If no signal is heard, change LOOP variable to 10° and again rotate OSC variable from 0° to 20°.
5. Continue this process until a signal is heard.
6. The LOOP variable setting should be changed in 5° increments, and tuning the OSC variable from a point 10° below the LOOP variable setting to a point 10° above the LOOP setting.
7. For moderate DX searching, the same procedure applies, but the LOOP variable settings should be advanced by 2° increments.
8. A signal will appear at two points on the OSC variable dial: the lowest point is the adjustment of the OSC that gives a frequency of 45KC higher than the frequency of the received signal.
9. The highest point of reception of the same signal is for the frequency of the OSC that is 45KC below the signal frequency.
10. A given signal should be heard at the same intensity at both points.
11. Rotating the loop for every received signal should be understood, as a loop is uni-directional, and a signal can be strengthened by rotating the loop into the incoming signal, not broadside.
12. A signal received from, say, 1,000 miles away requires that the OSC coupler rotor should be adjusted as near as possible to the minimum coupling position. Once this adjustment is made, it may be locked-in that position with the set-screw supplied with the Remler 620 OSC coupler, and need not be re-adjusted for the life of your OSC tube. A new OSC tube will require a re-adjustment.

* * *

AUTHOR's NOTE:

Because the hobby of vintage radio is an infrapersonal experience, and because we all acquire knowledge that becomes second nature to us and it never occurs to us to mention it, I had forgotten all about the instructions listed above, as they were written in 1954. However, a recent telephone conversation with Charlie Rhodes asking after just such instructions caused me to go digging in my files, and the above is the result. Charlie is currently playing around with a REMLER 45KC Super-Het, and if these instructions were of value to him, they could also be of value to you, as they would apply to any so-called super-het circuit using the REMLER-type OSC coupler, such as Camfield, Thor, S-M, General Radio, etc.

* * *

THE BEST 115 KC. SUPERHETERODYNE

2 stages of S.G. RF amplification; regenerative 1st Detector; Oscillator; 2 stages of S.G. IF amplification at 115 KC.; 2nd Detector; 2 stages of AF amplification.

TUBE COMPLEMENT:

(4) 22, (4) 01A, 12A/71A. If an external amplifier employing a 10 or 50 output tube, the 2nd AF stage may be omitted from the receiver.

GENERAL DATA:

Original Kit Price = $180.
Panel = 7" x 26": Baseboard = 11" x 25"

REMLER Components Used:
- #720 Shielding Case
- 110 Drum Dials (2)
- 633 3-in-Line Variable
- 618 Twin-Rotor Variable
- 502 ANT Compensator
- 55 Ballast Shields (8)
- 50 Tube Sockets (15)
- 61 Resistance Mountings
- 35 Choke Coils (4)

XFRMRS.: 922, 901, 900

COILS: 550, 570, 562, 564, 612, 614

KNOBS: DK-10, 750-12 (2)

CRCB VERSION OF THE REMLER 45KC.; Sht. 1

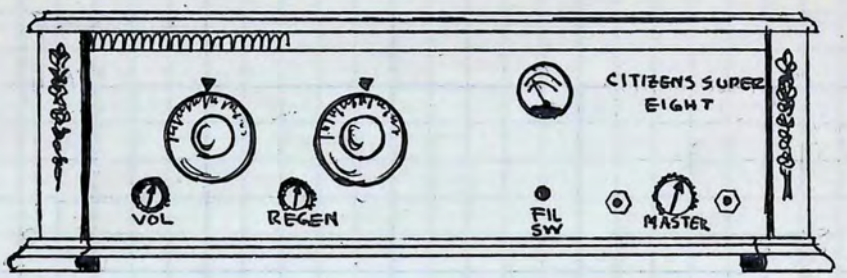

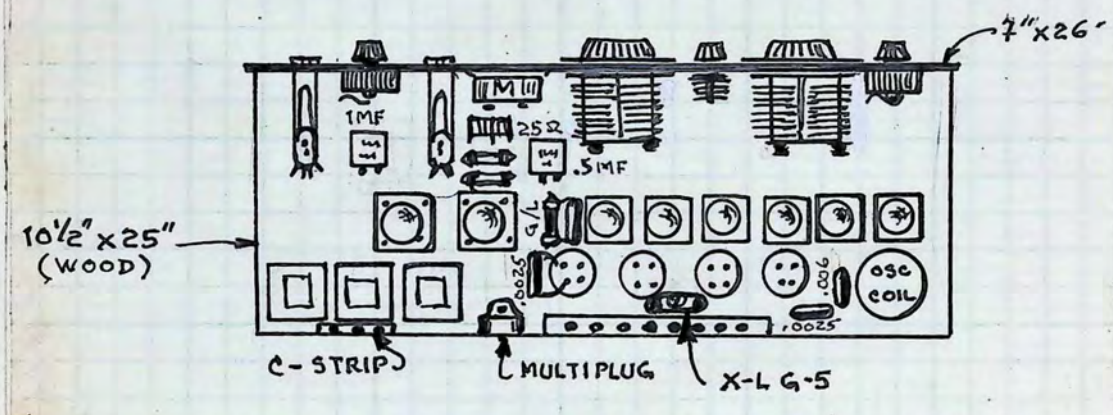

PRINCIPLE PARTS LIST

(2) REMLER "Twin-Rotor" 350MMF Variables, #639.
(2) " #600 Xfrmrs.
(2) " #610 " .
X-L "Variodenser" G-5.
(2) REMLER 4" Dials. (German-Silver Faces.)
JONES/FROST Multiplug, Type B-M.
5-M Osc. Cplr.
(2) " 220 AF Xfrmrs.
" 221 Output Xfrmr.
WESTON #506 Dual-Scale VM.
FROST #234 & #235 Jacks.
(7) " #530 Sockets.
(1) BENJAMIN Cushion Sckt.

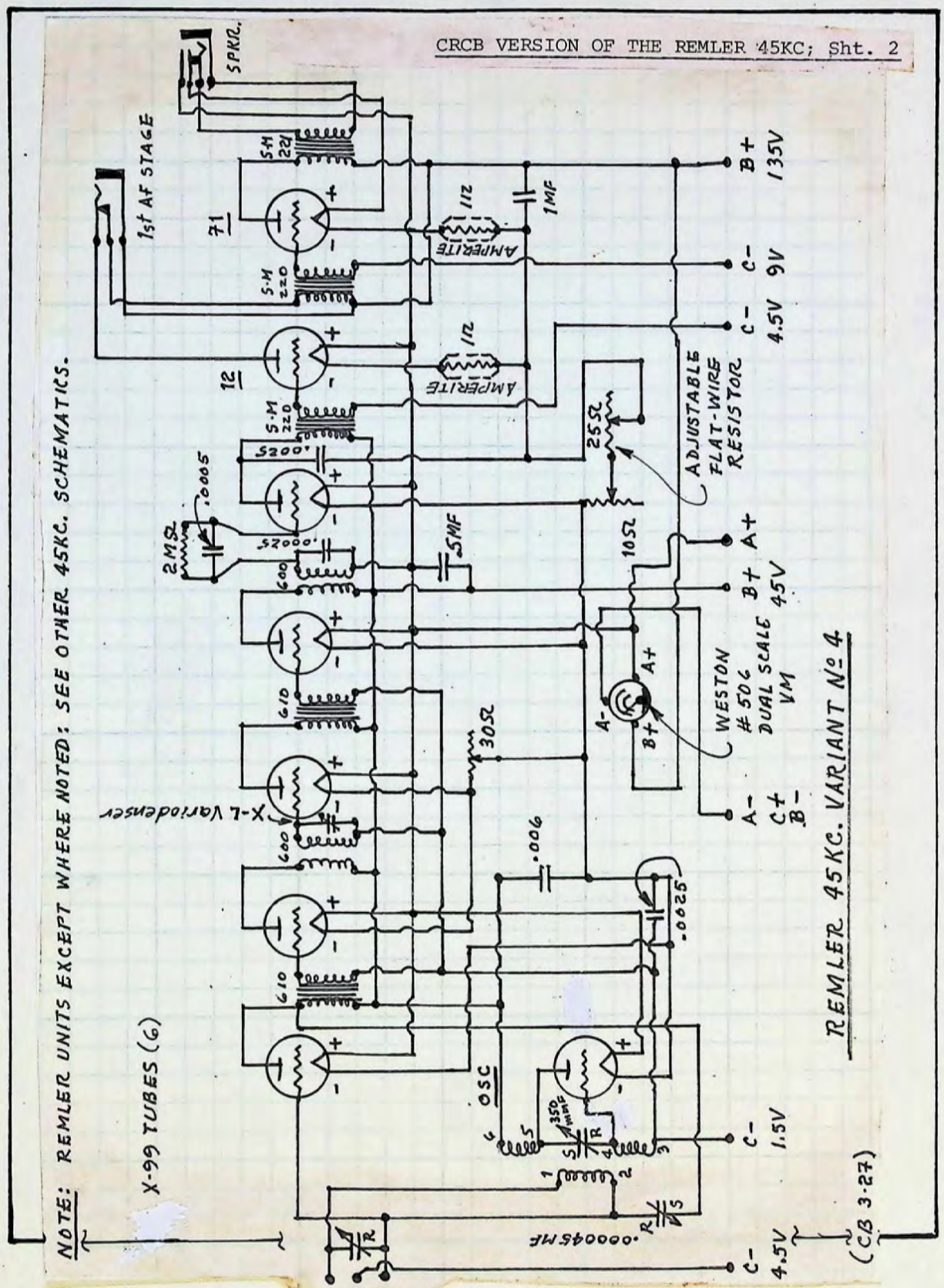
CRCB VERSION OF THE REMLER 45KC; Sht. 2
NOTE: REMLER UNITS EXCEPT WHERE NOTED: SEE OTHER 45KC. SCHEMATICS.
X-99 TUBES (6)
1st AF STAGE
SPKR.
71
12
AMPERITE
1MF
.5MF
.0005
2MΩ
.5200
.52000
600
610
X-L Variodenser
30Ω
.006
.0025
OSC
350 MMF
.000045MF
LOOP
ADJUSTABLE FLAT-WIRE RESISTOR
25Ω
10Ω
WESTON #506 DUAL SCALE VM
B+ 135V
C- 9V
C- 4.5V
A+
B+ 45V
A-
C+
B-
C- 1.5V
C- 4.5V
REMLER 45KC. VARIANT No 4
(CB 3-27)

REMLER
29
SHIELD GRID RECEIVER

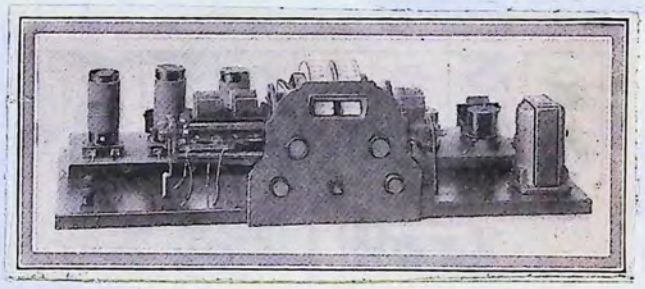

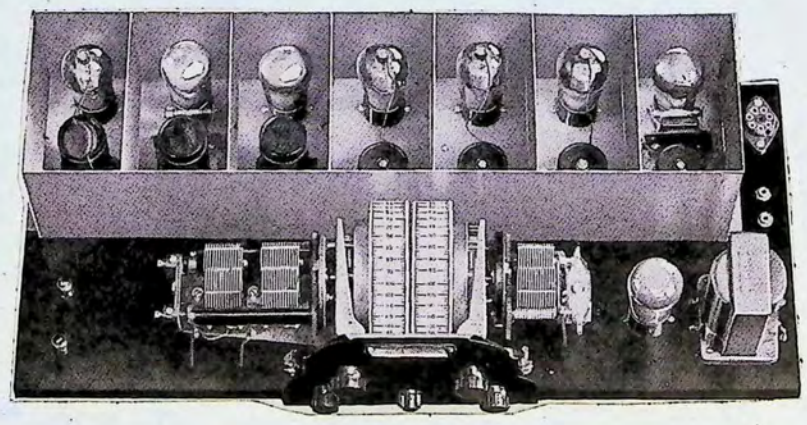

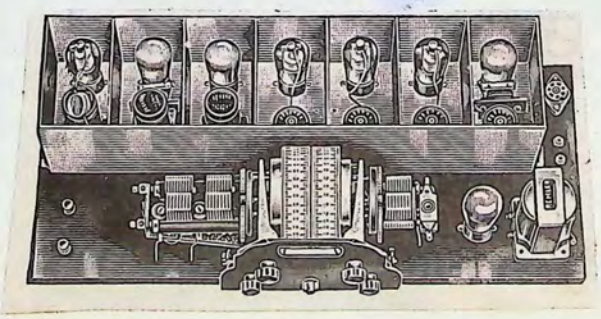

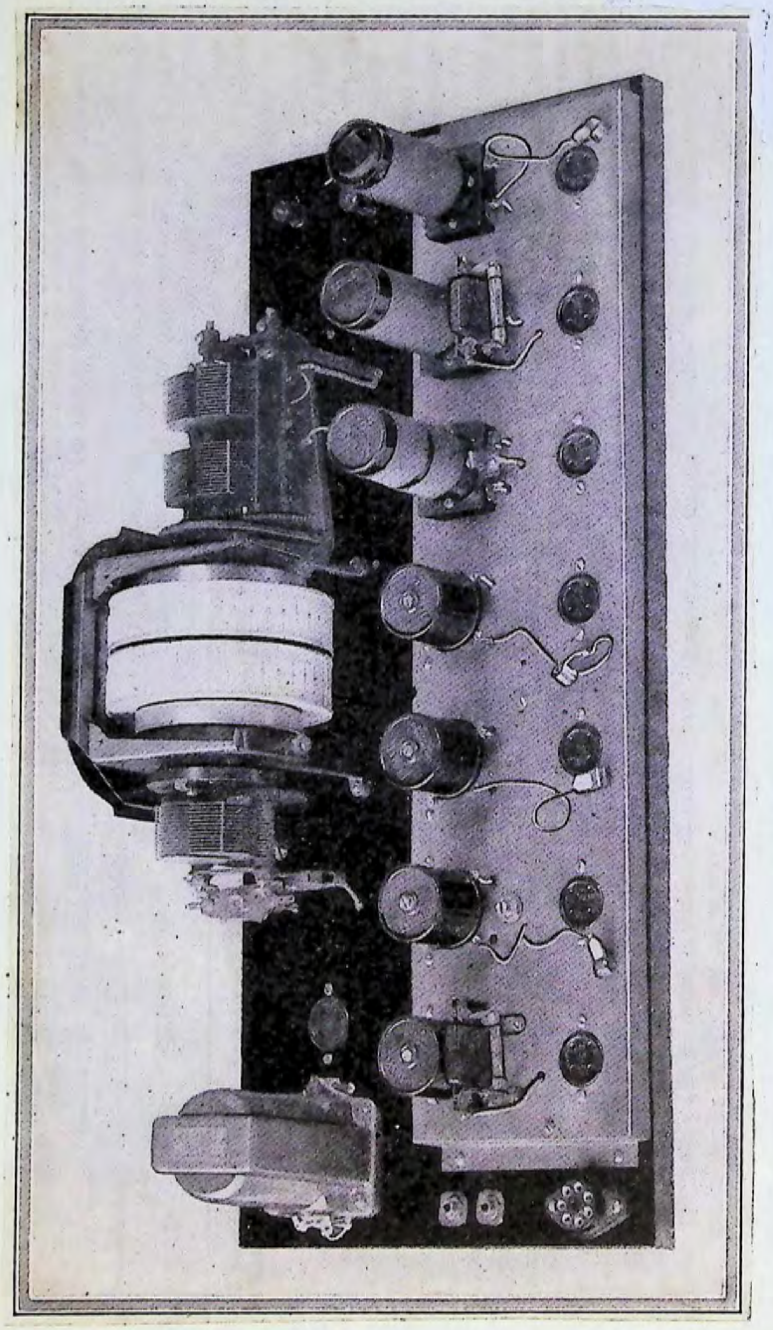

List of Parts Required

1—	Remler No. 712 Amplifier Unit	$ 70.00
1—	Remler No. 752 Foundation Kit	15.00
2—	Remler No. 110 Drum Dials	9.00
1—	Remler No. 632 Two Gang Condenser	12.00
1—	Remler No. 632 Condenser	5.00
1—	Remler No. 920 Audio Transformer	12.00
1—	Frost No. 780 Cable Plug	2.25
1—	Frost No. 782 Cable Plug Socket	.75
1—	Frost No. 1895 Volume Control	2.00
1—	Frost No. 1896 Regeneration Control	2.25
1—	Frost No. S1910 Rheostat and Switch	1.00
	LIST PRICE	$131.25

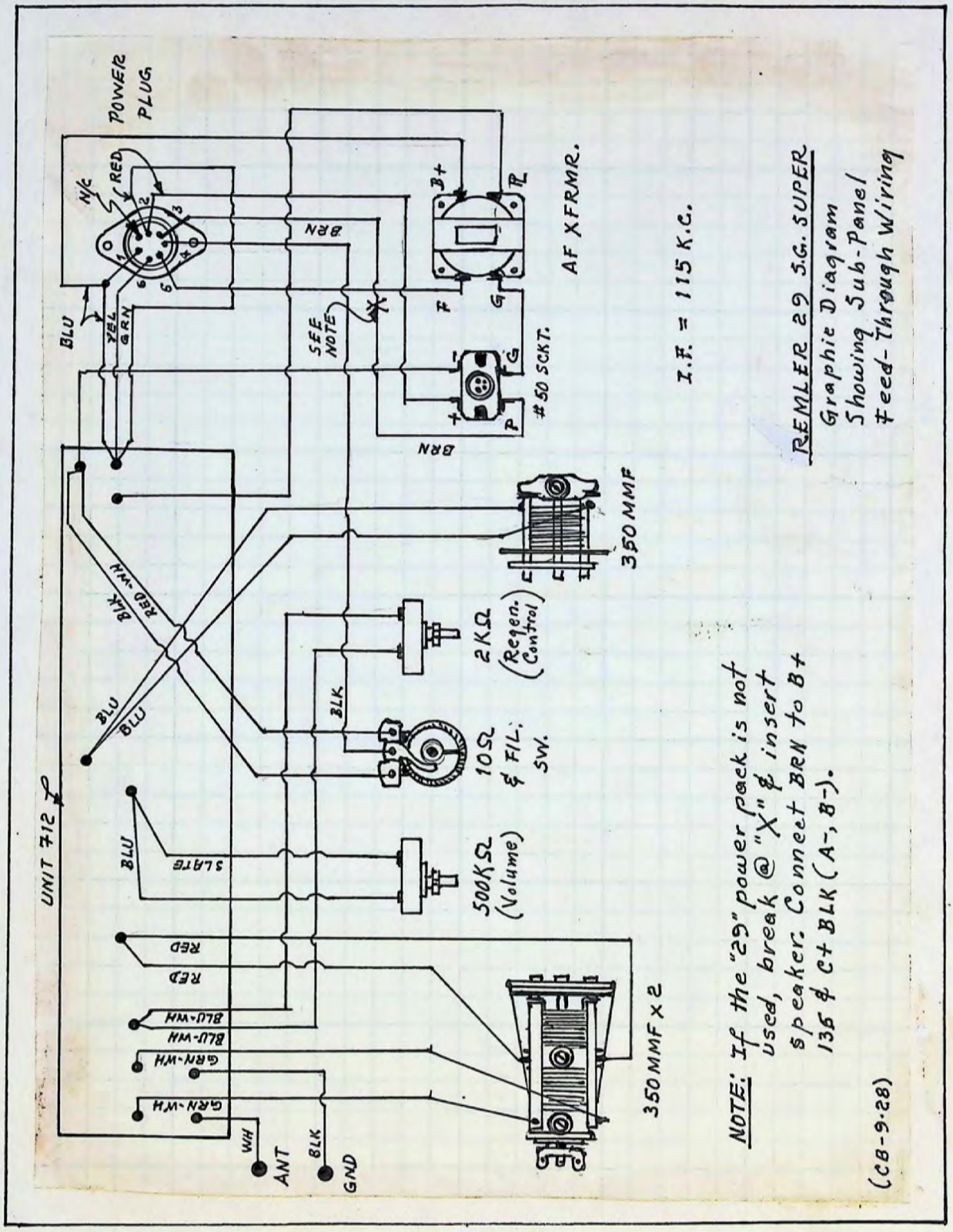
POWER PLUG
N/C
RED
BLU
YEL
GRN
BRN
SEE NOTE
X
B+
AF XFRMR.
#50 SCKT.
BRN
350 MMF
I.F. = 115 K.C.
REMLER 29 S.G. SUPER
Graphic Diagram
Showing Sub-Panel
Feed-Through Wiring
BLK
RED-WH
BLU
BLU
2KΩ (Regen. Control)
BLK
10Ω & F/L. SW.
UNIT 712
BLU
SLATE
500KΩ (Volume)
RED
RED
BLU-WH
BLU-WH
GRN-WH
GRN-WH
WH
ANT
BLK
GND
350 MMF x 2
NOTE: If the "29" power pack is not used, break @ "X" & insert speaker. Connect BRN to B+ 135 & CT BLK (A-, B-).
(CB-9-28)

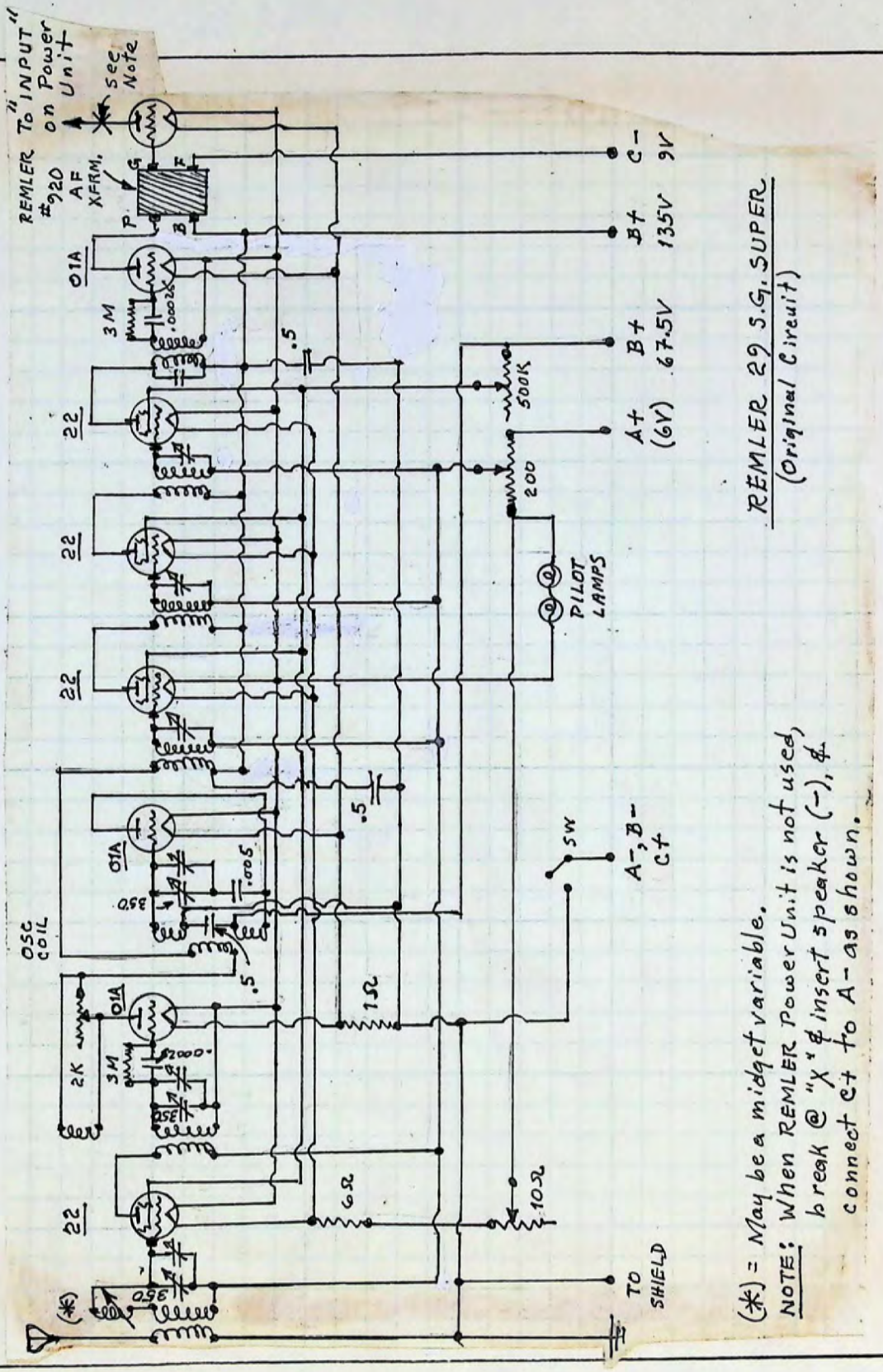
REMLER 29 S.G. SUPER
(Original Circuit)
(*) = May be a midget variable.
NOTE: When REMLER Power Unit is not used, break @ "X" & insert speaker (-), & connect ct to A- as shown.
REMLER "INPUT" #920 on Power Unit
See Note
AF XFRM.
01A
22
3M
.0002
.5
500K
200
PILOT LAMPS
C-
9V
B+
135V
B+
67.5V
A+
(6V)
A-, B- ct
SW
OSC COIL
350
.005
2K
2000
1Ω
6Ω
10Ω
TO SHIELD

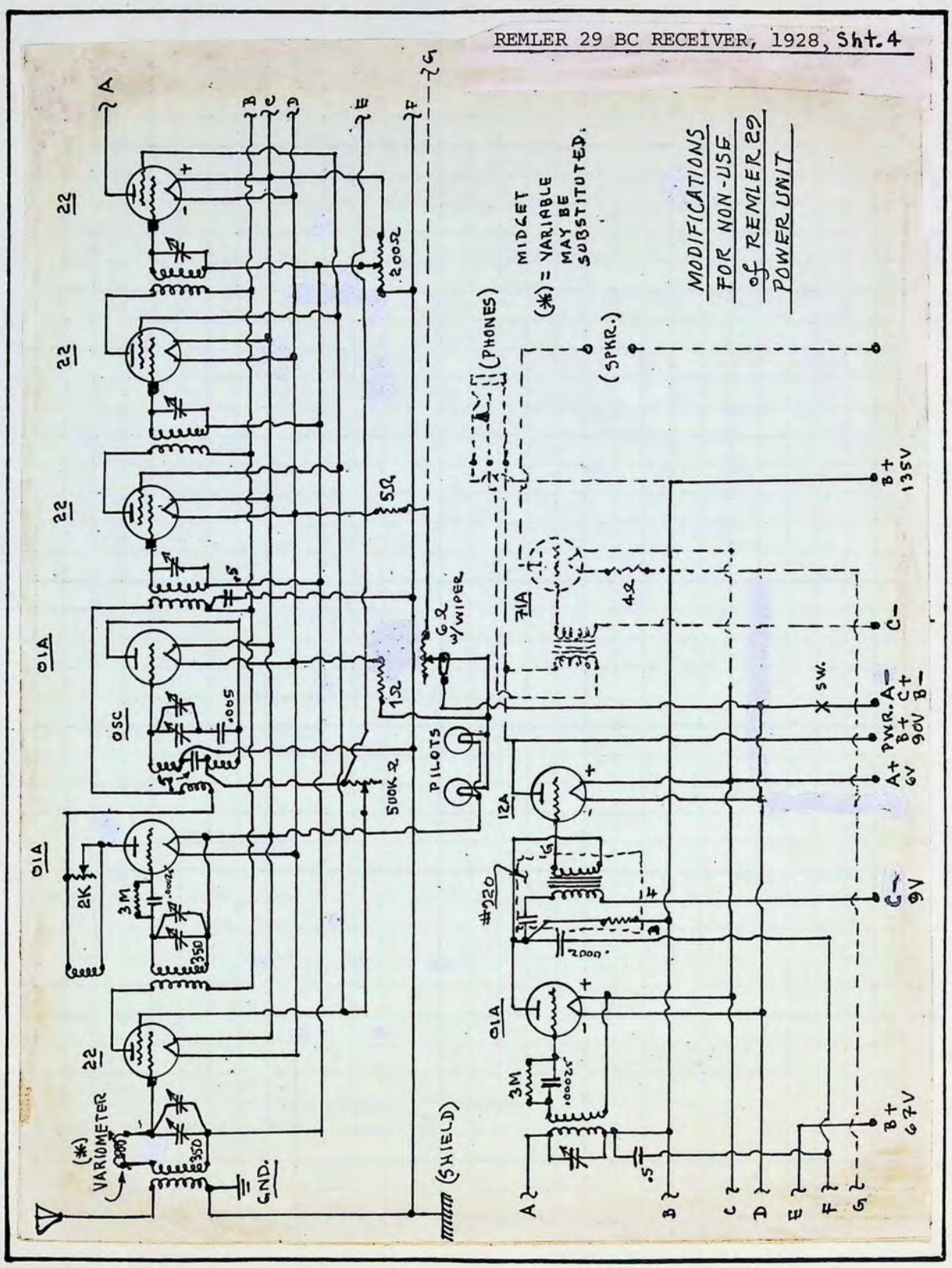
REMLER 29 BC RECEIVER, 1928, Sht. 4
MODIFICATIONS FOR NON-USE of REMLER 29 POWER UNIT
(*) = VARIABLE MAY BE SUBSTITUTED.
MIDGET
(PHONES)
(SPKR.)
22
01A
OSC
.005
2K
3M
.0002
350
VARIOMETER
GND.
(SHIELD)
200Ω
5Ω
1Ω
500K Ω
PILOTS
6Ω w/WIPER
71A
4Ω
12A
#220
.2000
B+ 135V
C-
A+ 6V
PWR. A- B+ 90V
C+ B-
C- 9V
B+ 67V
SW.
A
B
C
D
E
F
G

REMLER 28 POWER COMPACT #950

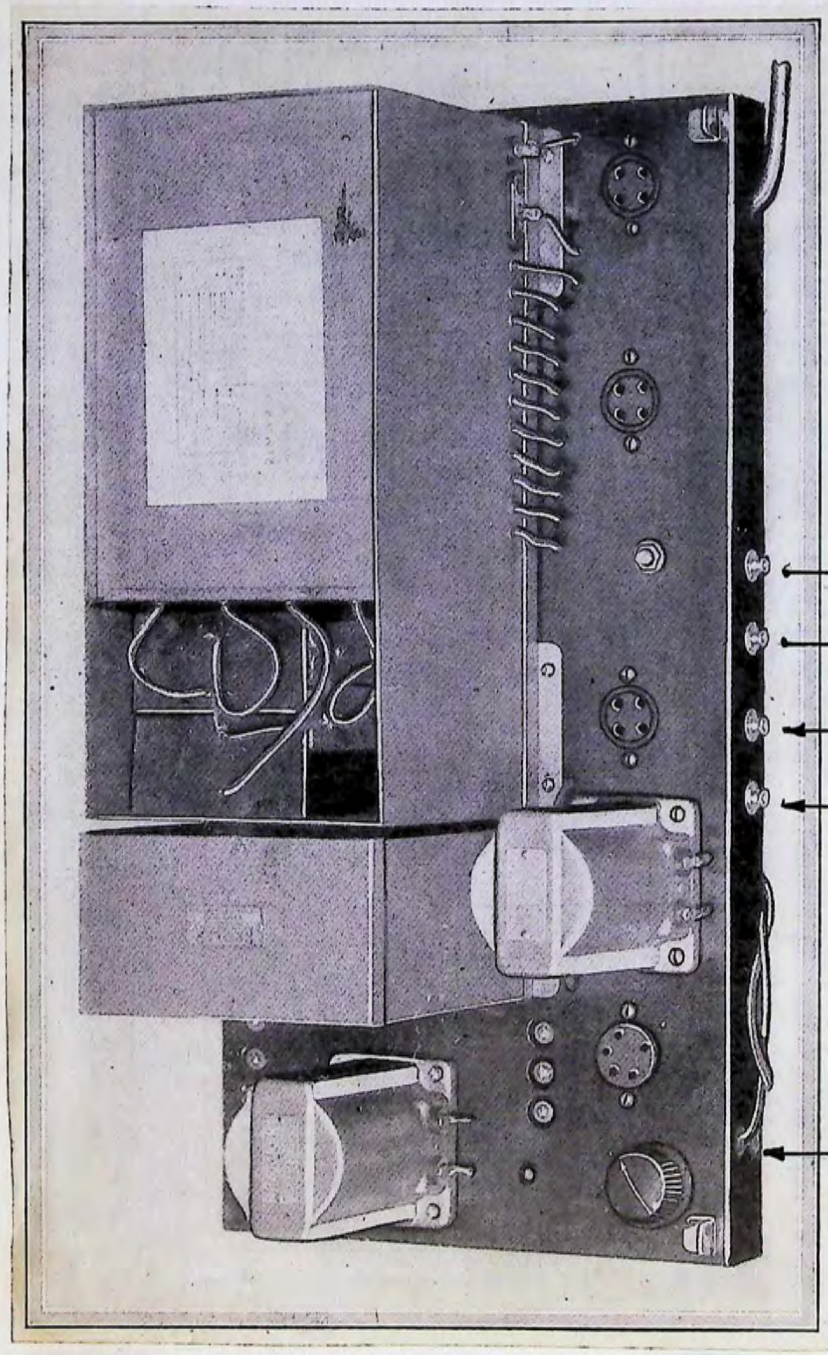

List of Parts Required

1—Remler No. 950 Power Transformer and Choke	$ 45.00
1—Remler No. 952 Foundation Kit	12.00
1—Remler No. 921 Audio Transformer	12.00
1—Remler No. 923 Output Impedance Compensating Transformer	20.00
1—Frost No. 300 Resistance Kit	9.00
3—Frost No. 1405 2 Mfd. Heavy Duty Filter Condensers	12.00
2—Frost No. 1105 2 Mfd. By-pass Condensers	4.00
LIST PRICE	$114.00

REMLER 29 POWER AMPLIFIER: 2 VERSIONS
(1928/1929)

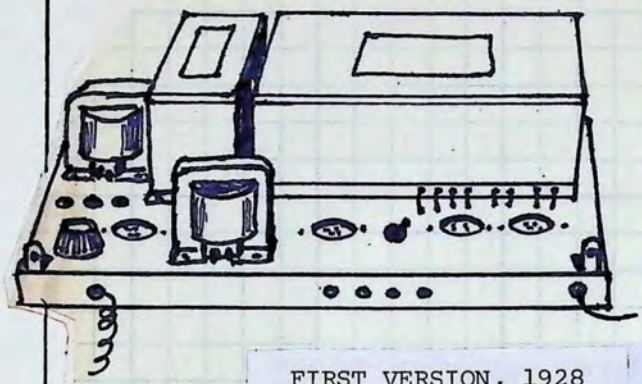

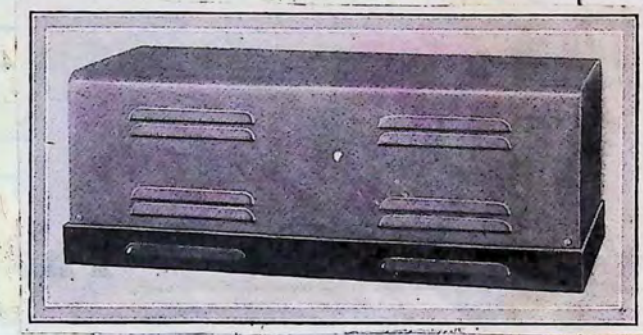

FIRST VERSION, 1928
(See Page 62.)

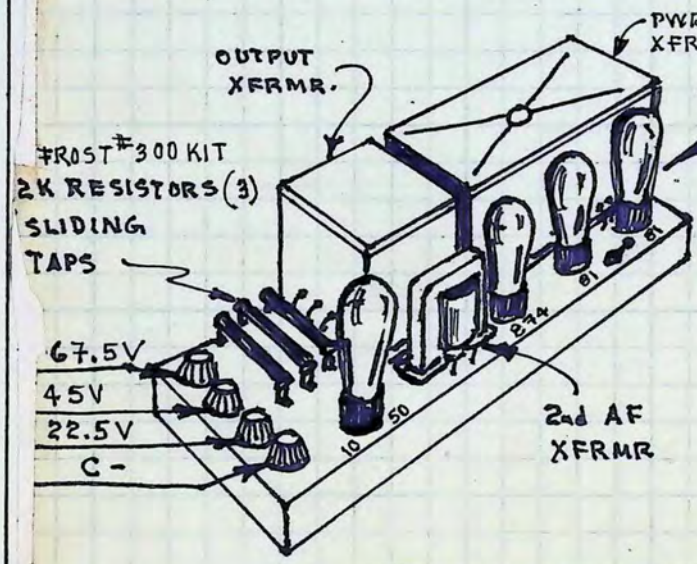

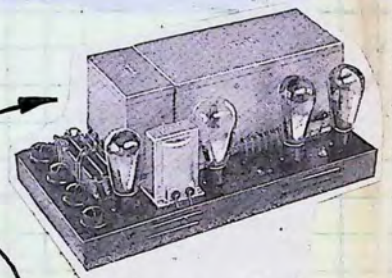

Power Amplifier for the REMLER "29"

SECOND VERSION, 1929

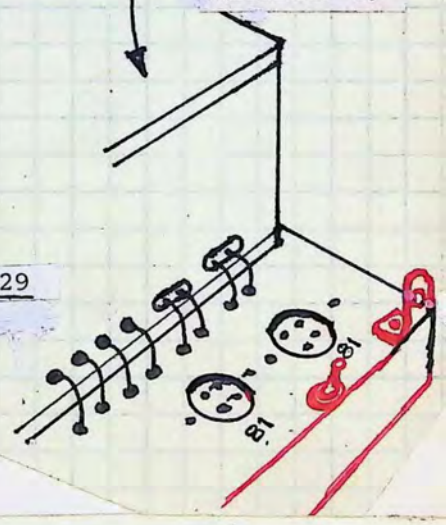

STEEL CHASSIS = 10.5" x 20" x 2.5"

REMLER 29 POWER AMPLIFIER; 1st VERSION

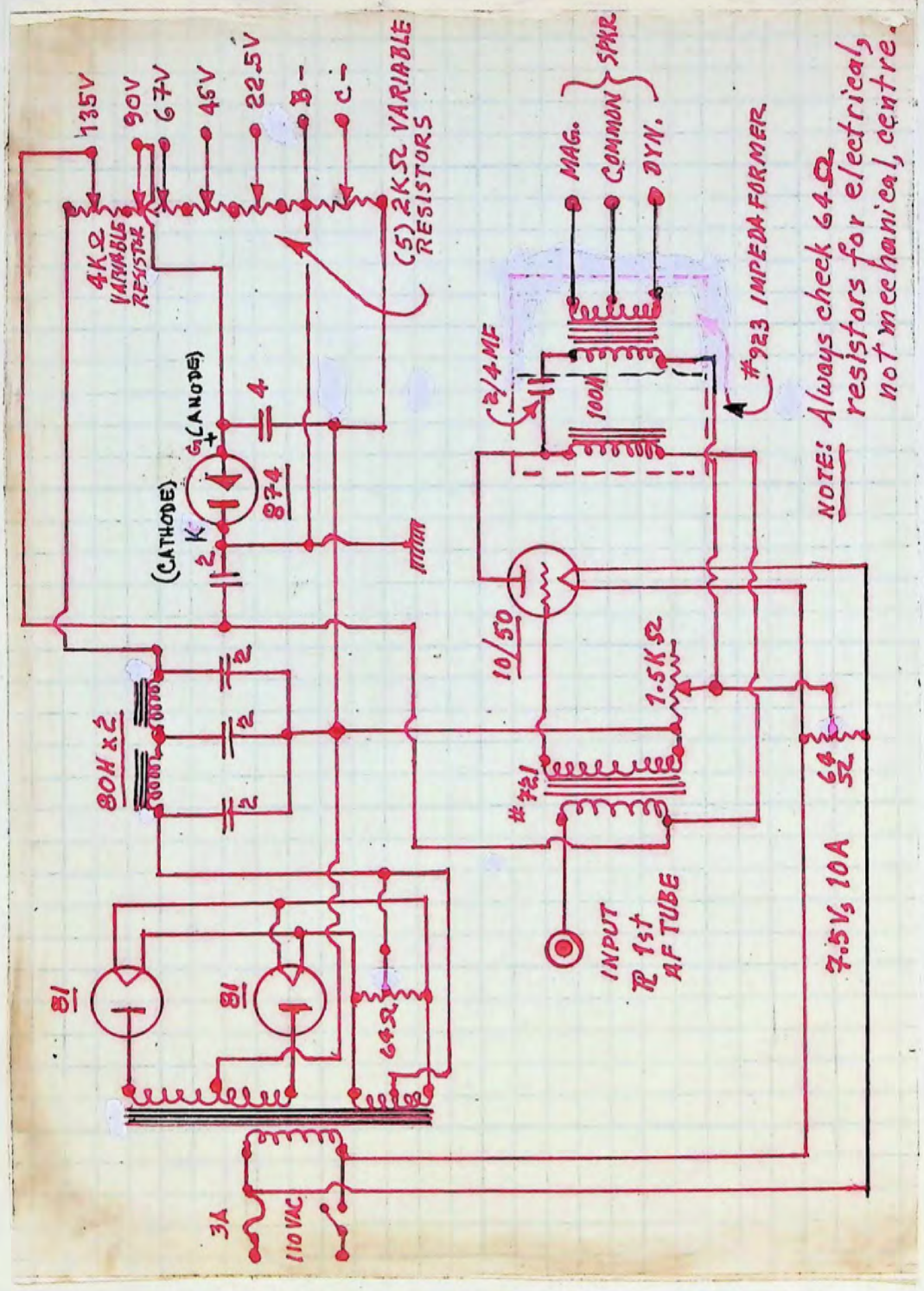

REMLER 29 POWER AMPLIFIER; 2nd VERSION

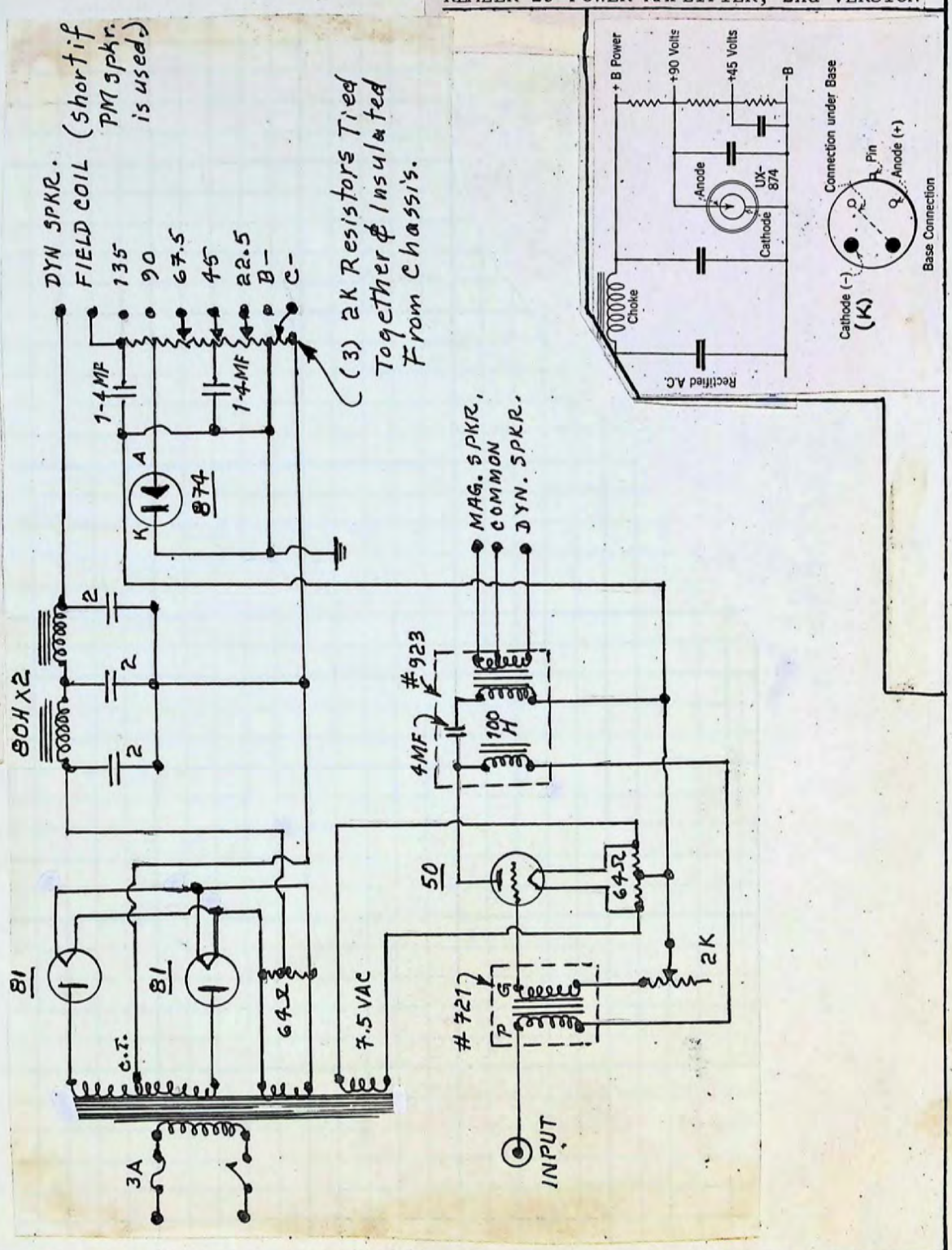

The connections for an UX-874 voltage regulator tube

REMLER 29 POWER AMPLIFIER, 1929
(3rd Version)

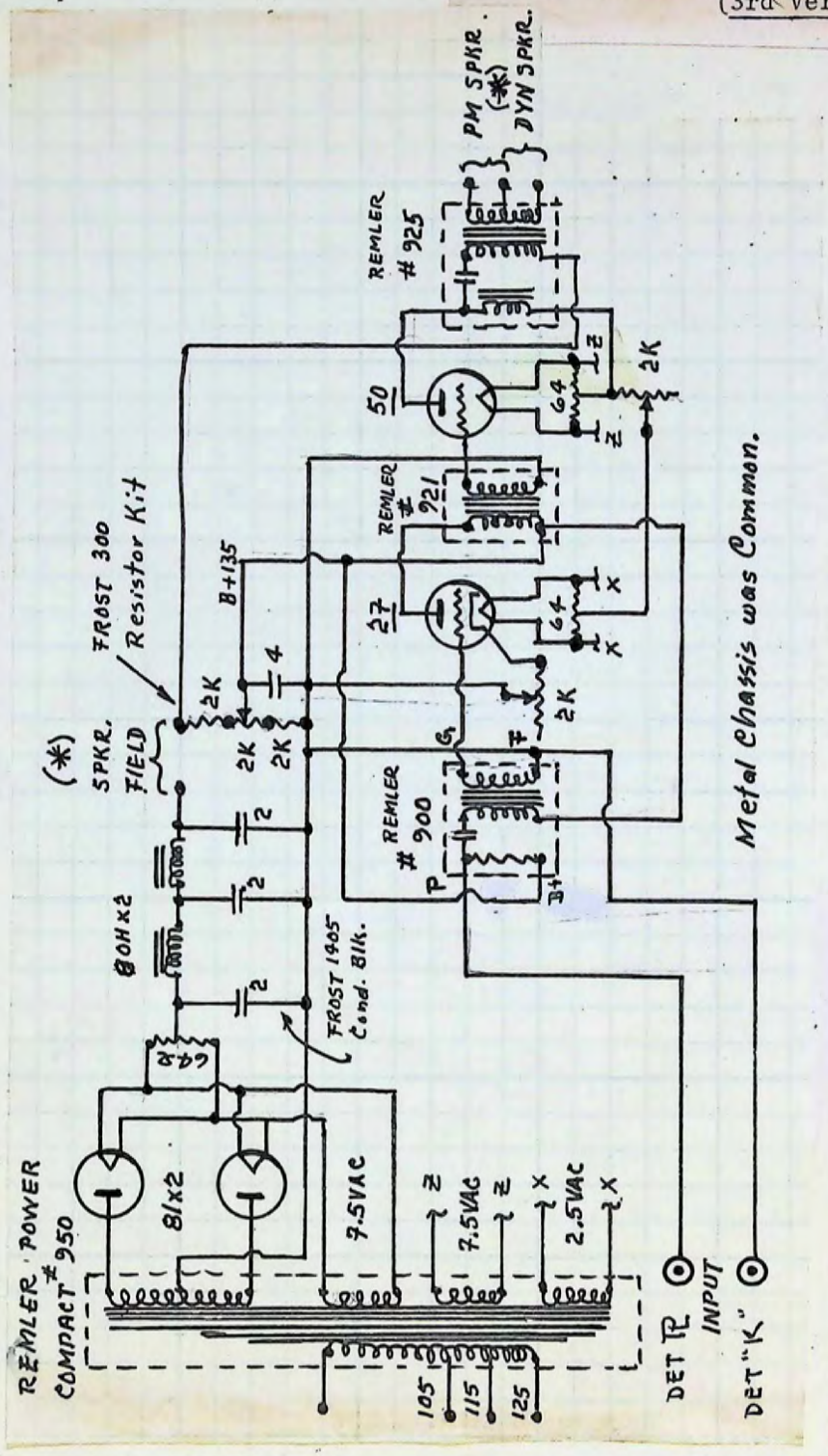

(*) = Bridge For PM Speaker.
Input is across F & P Terminals.
Xfrmr. Was Resonated PRI Type.

INFRADYNE 29 POWER COMPACT ADDENDUM

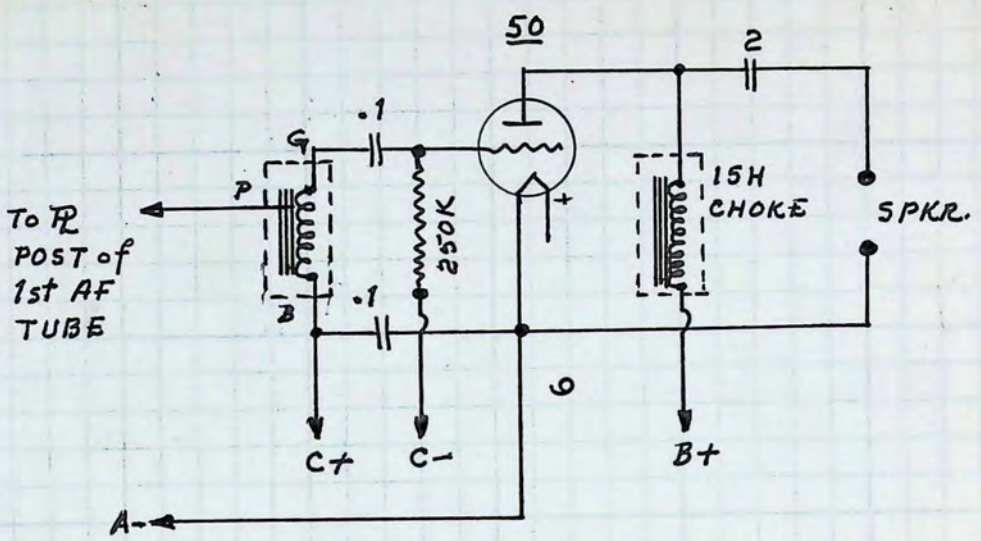

INCORPORATION of THORDARSON "Autoformer" INTO the "INFRADYNE 29" POWER AMPLIFIER.

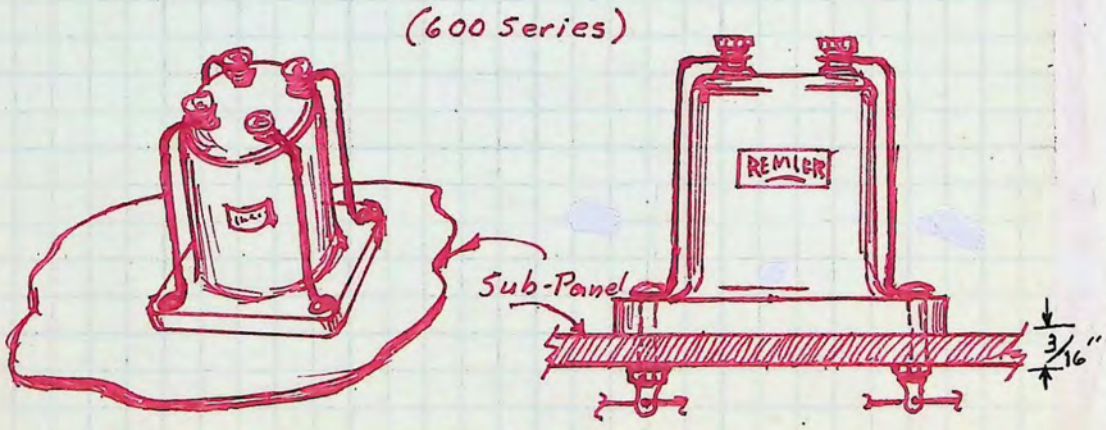

ORIGINAL XFRMR CONNEXIONS

A very neat installation but feasible only w/ an elevated sub-panel, not a baseboard.

A FORM OF FLATTERY....?

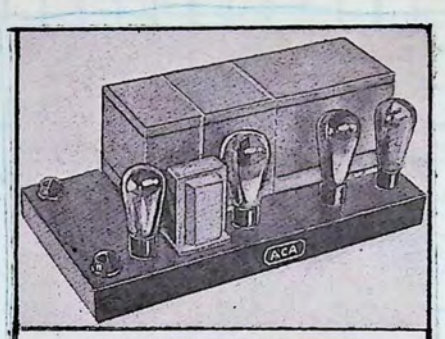

ANNOUNCING

a new engineering division headed by Mr. A. C. Shaney, an authority on amplifier design and construction. The facilities of this division will be exclusively devoted to the solution of field problems involving the use of an amplifier for sound reinforcing systems. **Send your problems to Amplifier Engineering Division for expert advice.** 16 New model amplifiers available to meet the requirements of the smallest or largest installation. Send 10c for a construction bulletin of 112, 171, 210 and 250 Power Amplifiers.

AMPLIFIER CO. of AMERICA

20 West 22nd Street **New York, New York**

(1938)

The advert above is reproduced in its entirety. It immediately arrested my attention while going through the 50th ANNIVERSARY ISSUE of RADIO NEWS, 1938.

What was arresting about it was the fact that a more than striking resemblance to the REMLER 29 Power Amplifier exists. If you will flip back to that amplifier you will see the point.

It would appear that the only physical difference was that Shaney, who had been in Radio since the Twenties, merely placed the voltage divider resistors and two of the voltage control pots under-chassis, although the variable resistors may have become fixed in Shaney's version - which was feasible.

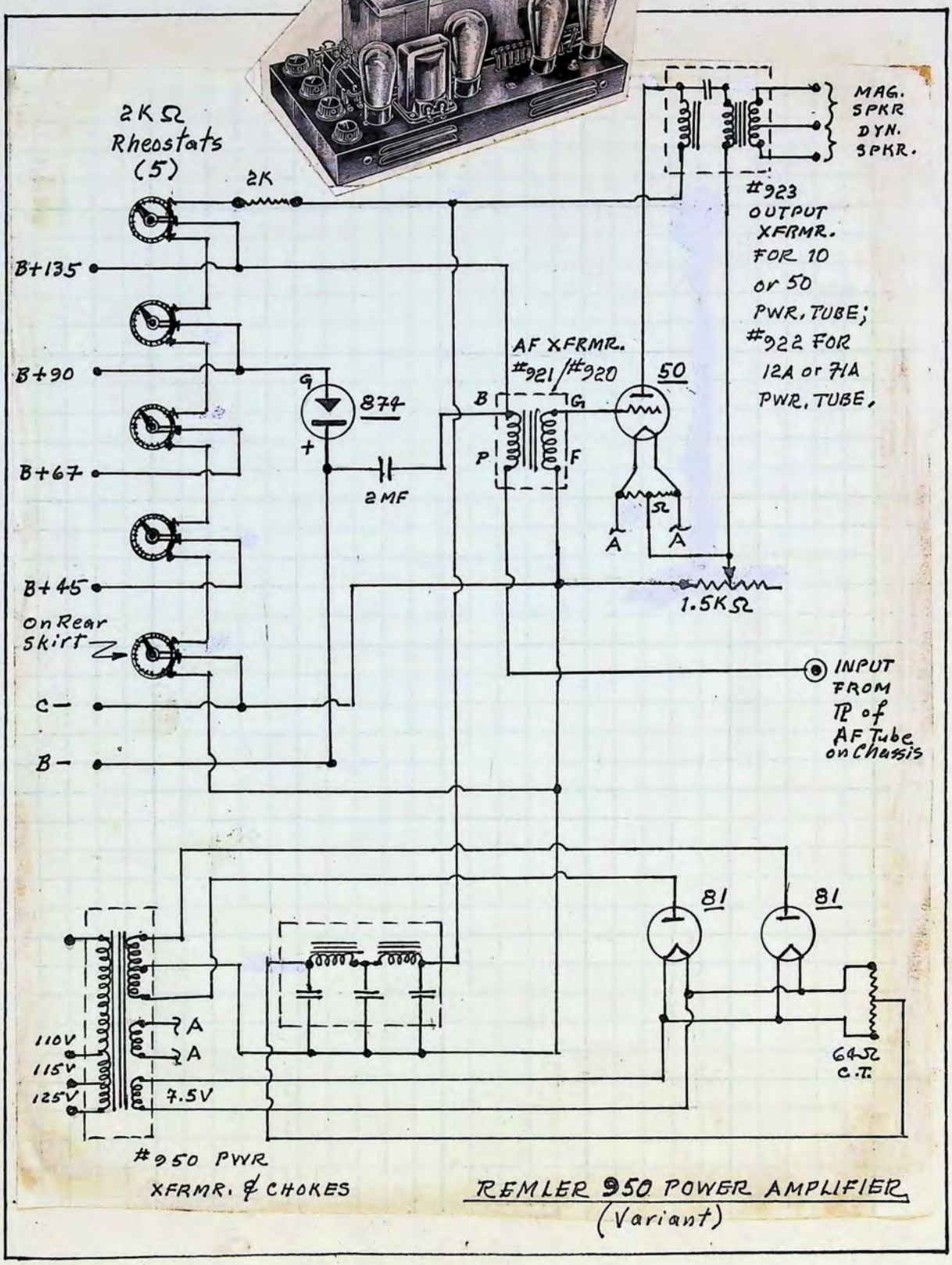
2KΩ
Rheostats
(5)
2K
B+135
B+90
B+67
B+45
On Rear
Skirt
C−
B−
G
874
+
2MF
AF XFRMR.
#921/#920
B
G
P
F
50
Ω
A
A
1.5KΩ
MAG.
SPKR
DYN.
SPKR.
#923
OUTPUT
XFRMR.
FOR 10
or 50
PWR. TUBE;
#922 FOR
12A or 71A
PWR. TUBE.
INPUT
FROM
TP of
AF Tube
on Chassis
81
81
110V
115V
125V
A
A
7.5V
64Ω
C.T.
#950 PWR
XFRMR. & CHOKES
REMLER 950 POWER AMPLIFIER
(Variant)

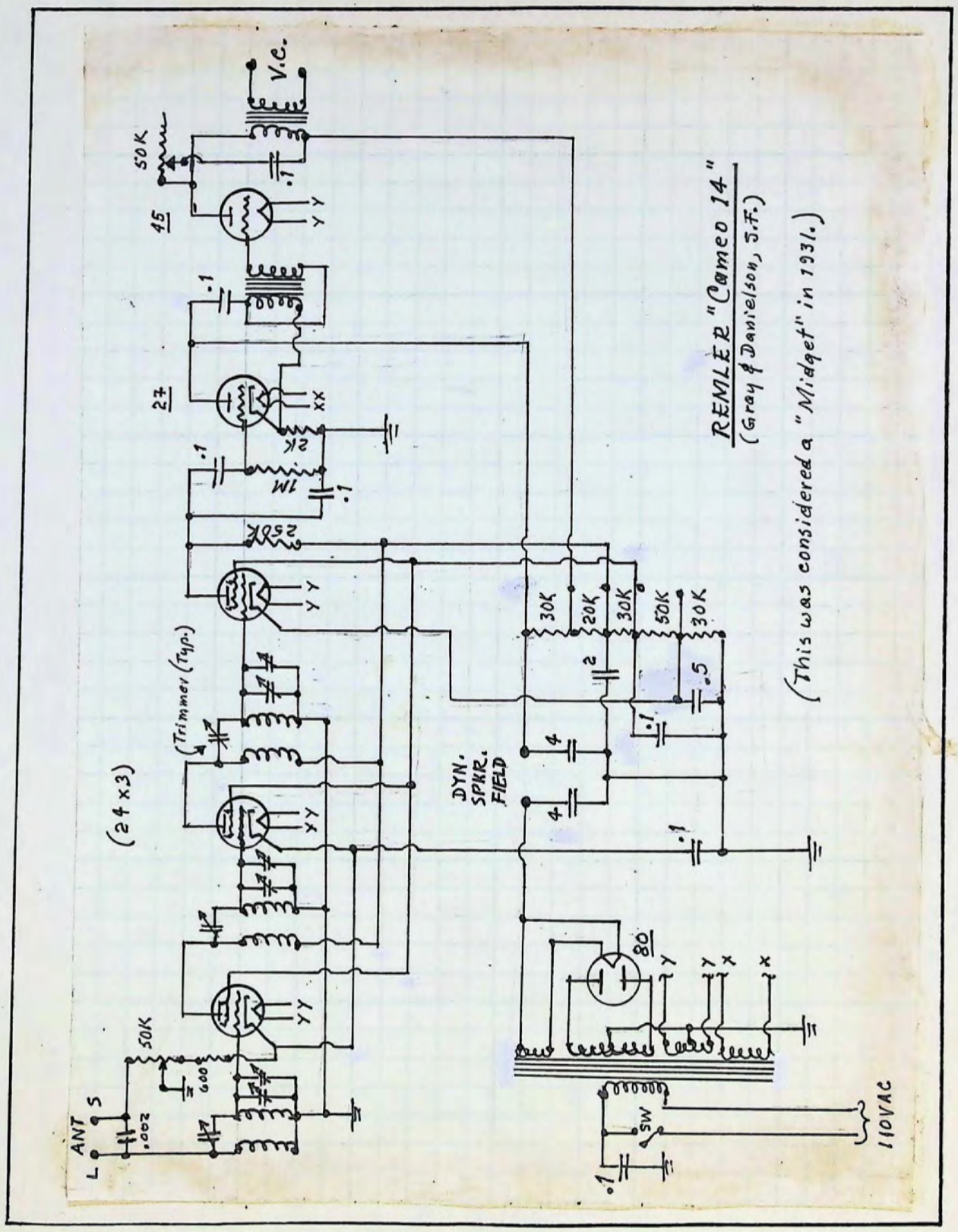
REMLER "Cameo 14"
(Gray & Danielson, S.F.)
(This was considered a "Midget" in 1931.)
(24 x 3)
(Trimmer (Typ.))
DYN. SPKR. FIELD
V.C.
ANT
L
S
.002
50K
600
45
27
80
1M
2K
250K
30K
20K
50K
.1
.5
2
4
SW
110VAC

REMLER POWER AMPLIFIER K-111; 1929

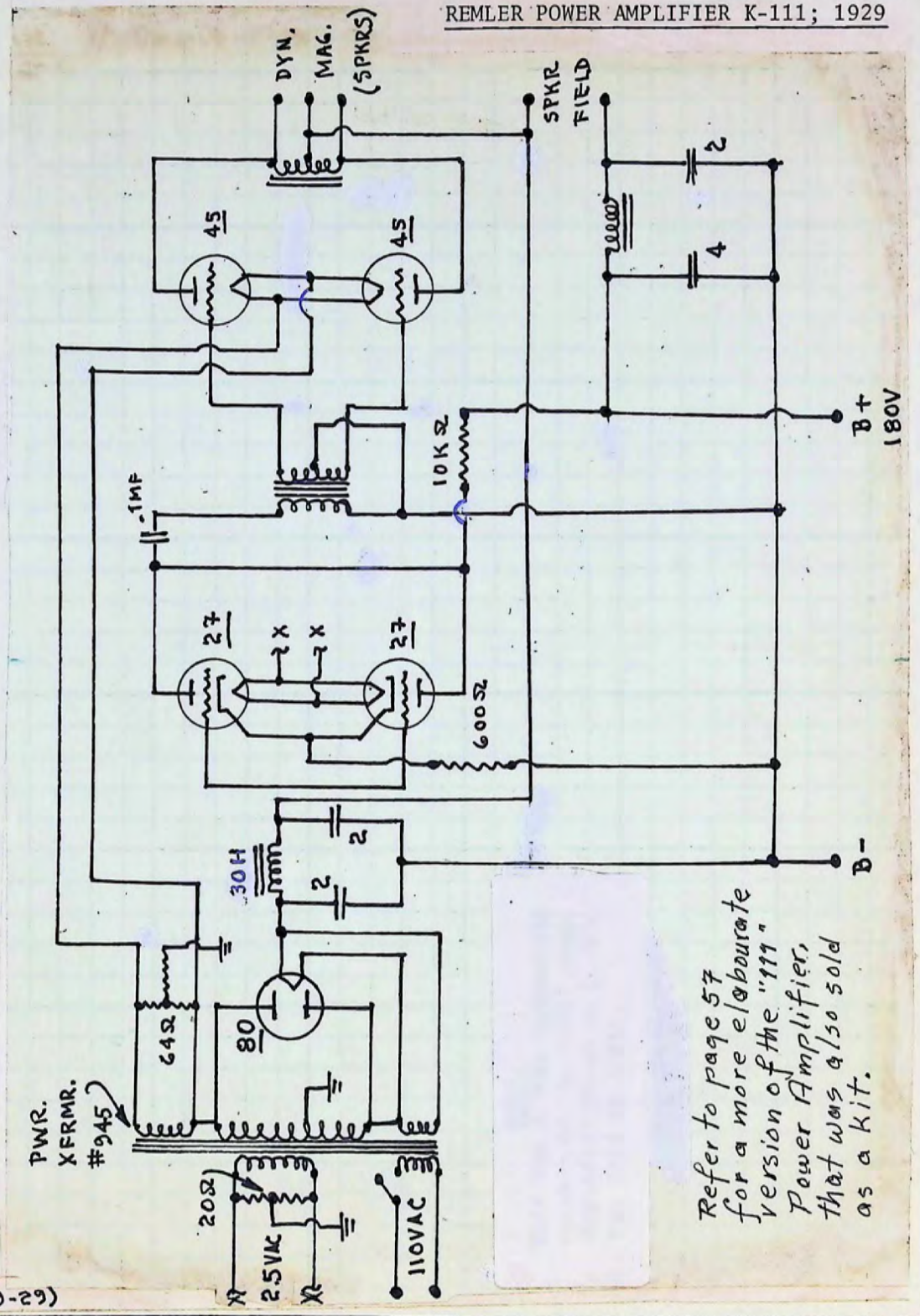

(R 9-29)

THE SARGENT-RAYMENT SIX, 1929

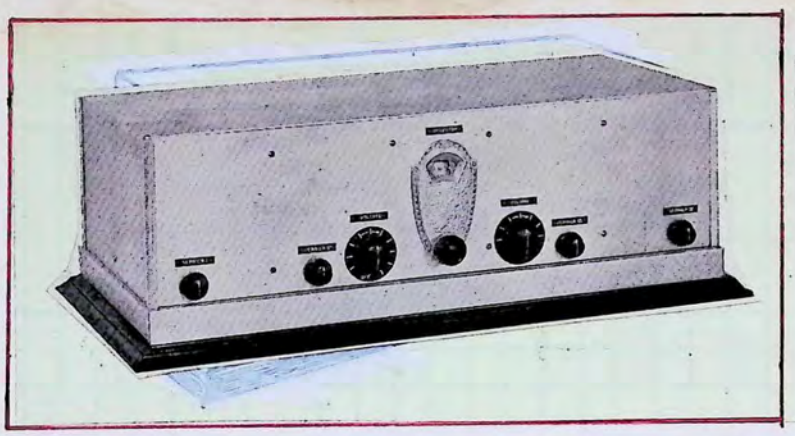

6 Tubes	10KC Selectivity
4 Tuned Circuits	3,000 Mile Range
3-Stage Screen-Grid RF Amplifier	
Single Knob Tuning	Individual Verniers
Clough Audio System	Illuminated Dial
AC Switch on VOL. Control	
Individually shielded circuits, by-passed, isolated.	
American black walnut base.	

This set was the forerunner of the Sargent-Rayment Seven, which is detailed in the following pages. The circuitry is identical, except for an added AF tube, so is not detailed here.

This set really never got off the ground, as the S-R Seven followed almost immediately, and that was the set heavily touted. Both sets were originally kitted by Silver-Marshall, this set retailing for $120. The all-aluminum cabinet could be had in a black or brown wrinkle finish for an additional ten dollars.

Silver-Marshall published a 16-page booklet to dramatise the advent of the S-R Six, entitled "RADIO PAR EXCELLENCE". The title was grammatically improper, but McMurdo Silver was never noted for his erudition, and he always passed on his advertising copy.

* * *
* *
*

(R 7-28)

SARGENT-RAYMENT "SEVEN"; Sht. 1

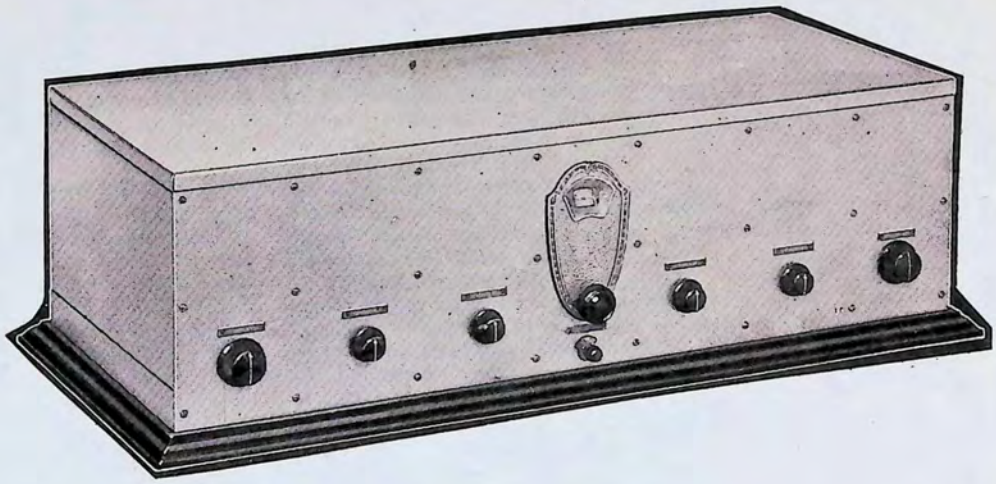

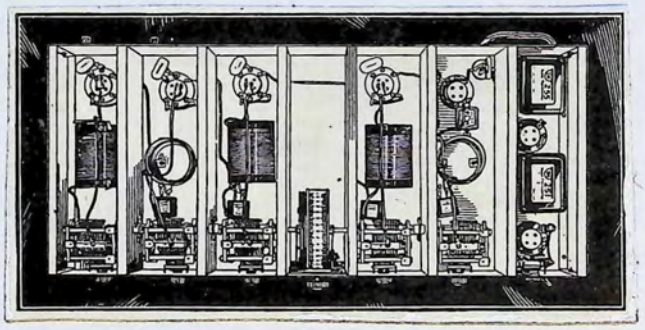

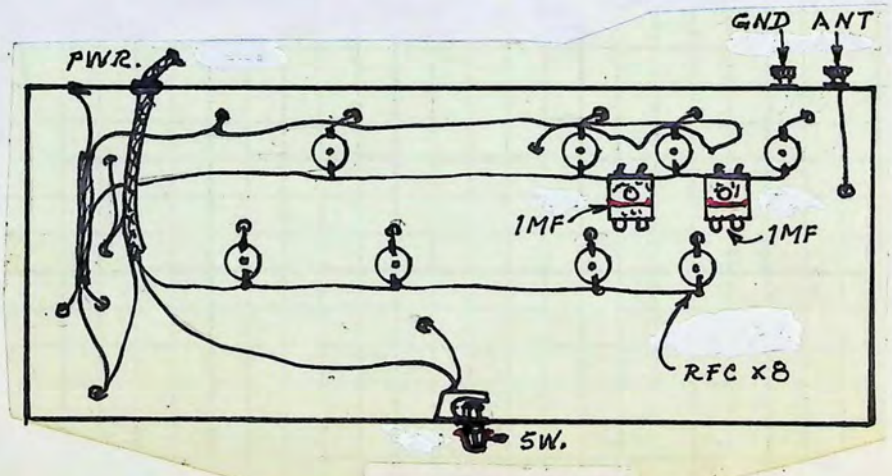

BOTTOM VIEW

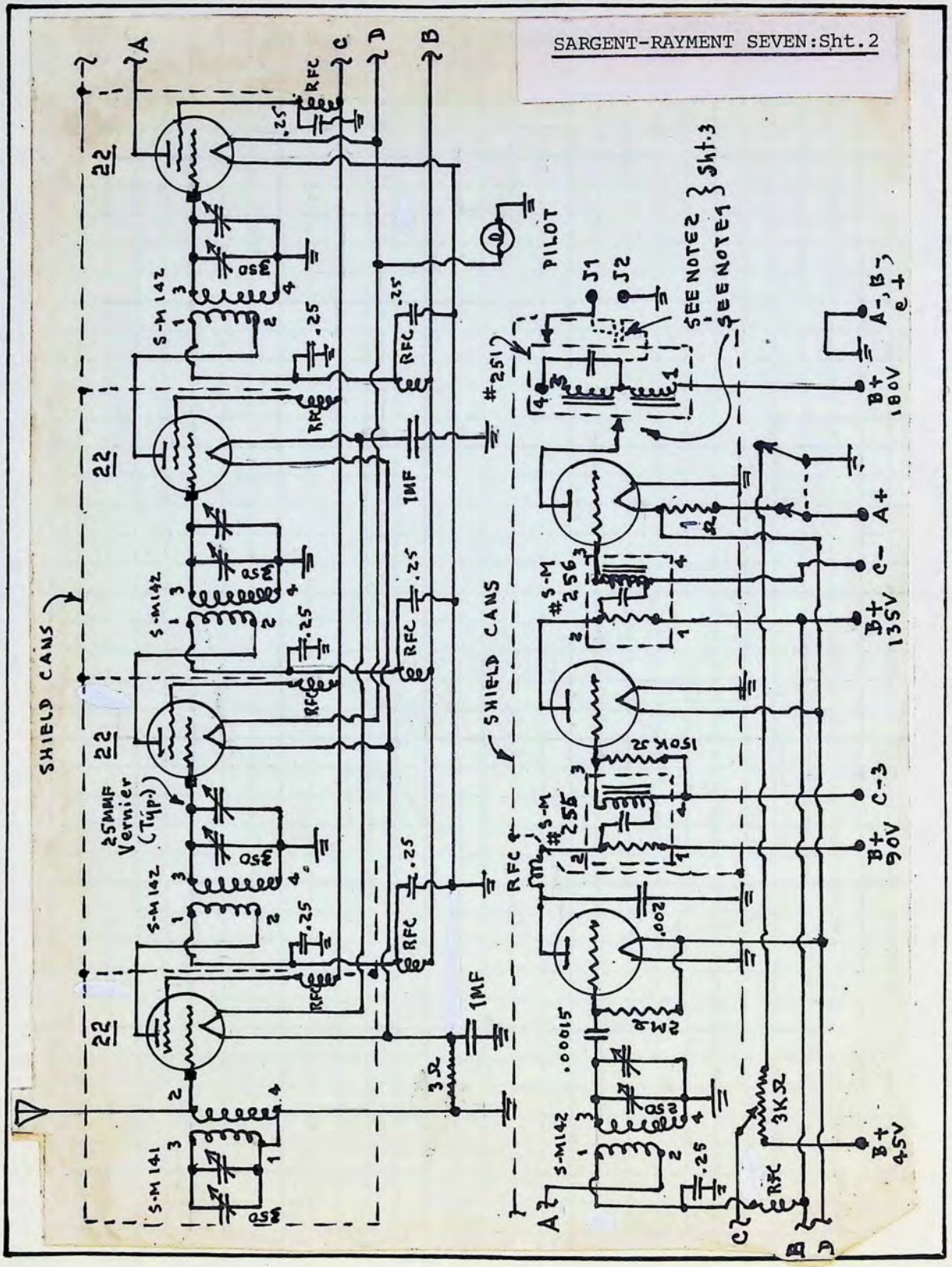
SARGENT-RAYMENT SEVEN:Sht.2
SHIELD CANS
25MMF Vernier (Typ.)
S-M 141
S-M 142
350
22
.25
RFC
1MF
3Ω
#251
PILOT
J1
J2
SEE NOTE 2
SEE NOTE 1
Sht.3
#S-M 256
#S-M 255
150KΩ
.002
.00015
2MΩ
3KΩ
A-, B-, C+
B+ 180V
A+
C-
B+ 135V
C-3
B+ 90V
B+ 45V
A
B
C
D

SARGENT-RAYMENT SEVEN, 1927; Sht. 3

NOTE 1: If 12A or 10 tube is used, connect Plate to terminal No.3. If 71A or 50 is used, connect to terminal No. 2.

NOTE 2: If less than 180V is used with 12A or 71A tube, connect speaker to terminal No. 4, as shown by solid lines. If more than 180V is used, speaker must be connected through a 600V-1MFD condenser, as shown by dotted line.

ORIGINAL PARTS LIST:

S-M ITEMS:

141 Antenna Coil
142 RF Coils (4)
320R Variables, 350mmf (5)
340 Midget Variables, 25mmf (5)
275 RFC (9)
255 1st AF Transformer
256 2nd AF Xfrmr.
251 Output Xfrmr.
708 10-lead Cable
706 Walnut Base
705 Al. Shielding Cabinet

National "F" Illuminated Vernier Dial

(2) 2MFD Condensers
(8) .25MMF Condensers
.00015MFD Condenser
.002MFD Condenser
3K-Ohm Pot.
2M-Ohm Grid-Leak
150K-Ohm Resistor
1-Ohm Resistor
3-Ohm Resistor
(2) X-L Binding Posts
(3) Shaft Couplers
DPST Switch
(2) Tip-Jacks

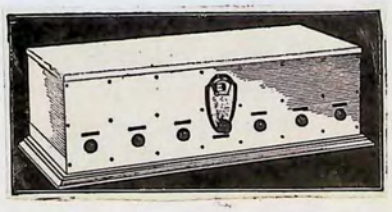

SARGENT-RAYMENT SEVEN NOTATIONS

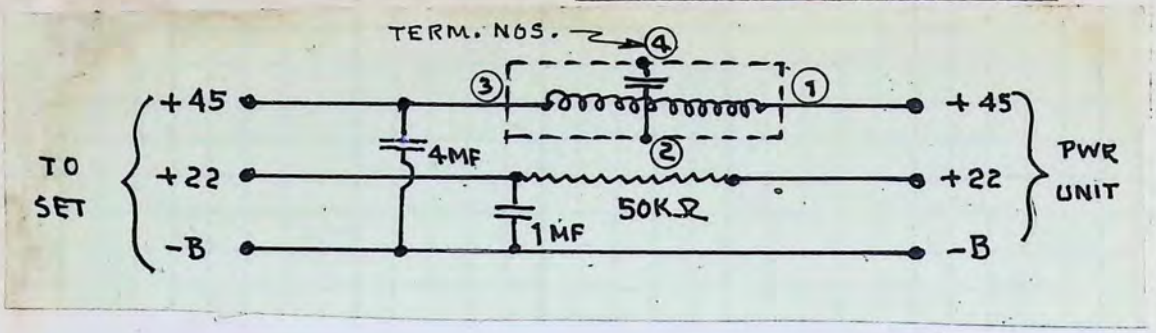

The S-R 7 had a consistent drawback, which Sargent, himself, was aware of - a drawback never mentioned in the articles in early radio media treating of this receiver. The drawback was that it would consistently "motor-boat" at one setting of the VOL control that regulated the screen-grid voltage of the RF tubes.

Sargent then designed the efficient filter network shown above, which he called a "Stabilizer". It consisted of a small RFC, shown within the dotted line, a resistor and capacitors. This "Stabilizer" appeared in but one magazine, then disappeared, which simply meant that if an owner of the S-R 7 did not see that article, he never knew how to correct his problem.

All of which, however, should not preclude your either constructing the S-R 7, or restoring one you have, as when it worked, it worked quite well. I have pulled in signals from Japan, London, Australia and Germany - under what our early writers used to call "favourable conditions".

REMLER AC COMPACT SUPER-HET, 1928; Sht. 1

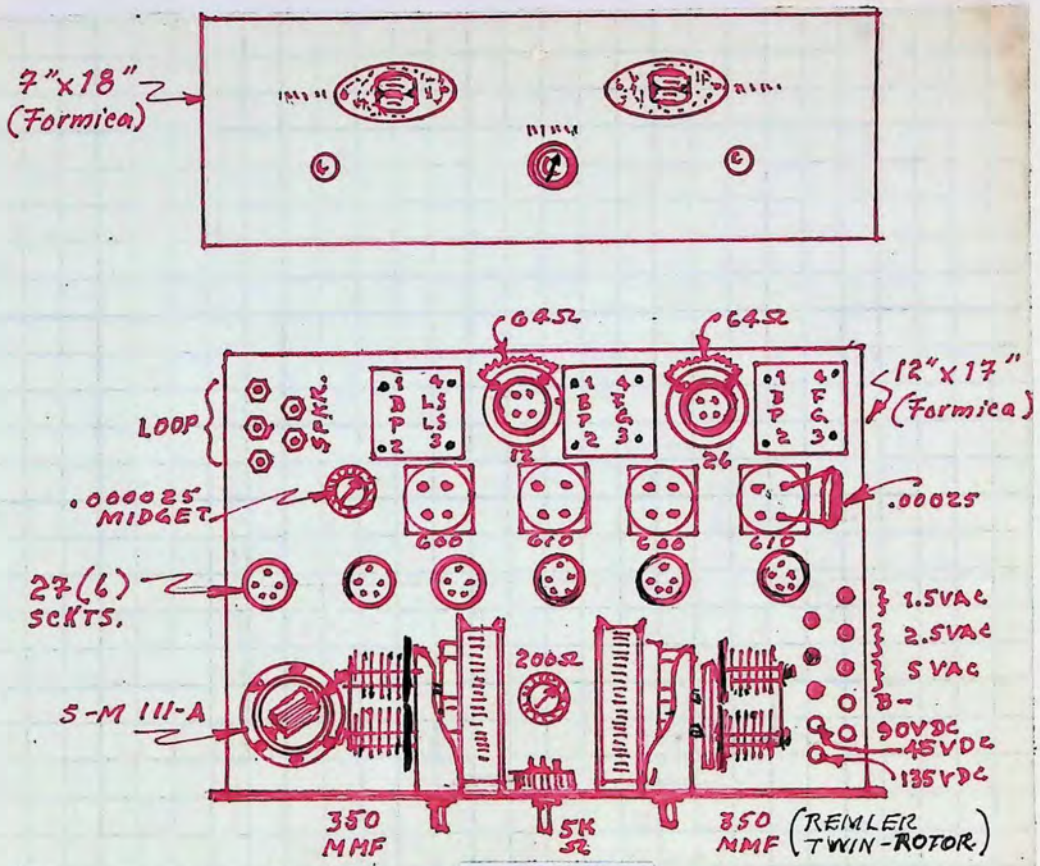

LAYOUT

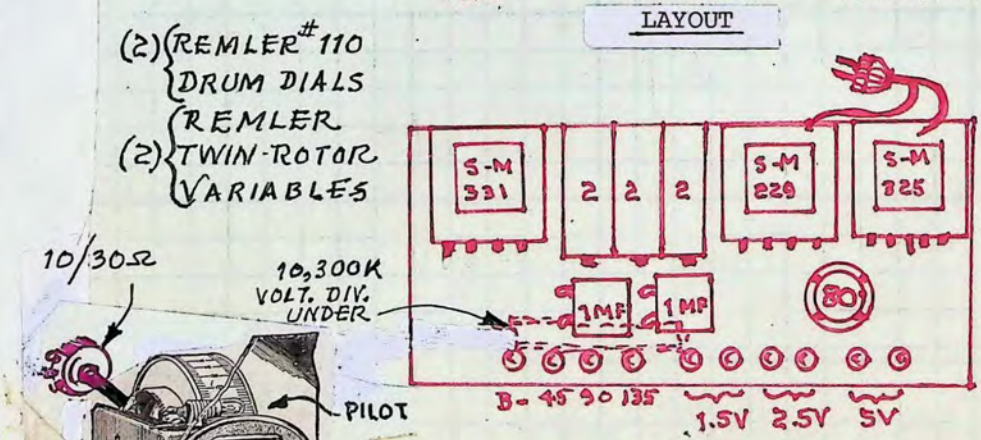

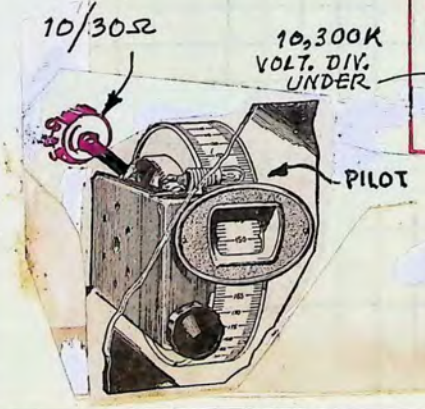

S-M DESIGNED POWER UNIT
& AMPLIFIER
(See Sht. 3)

(CB 1-28)

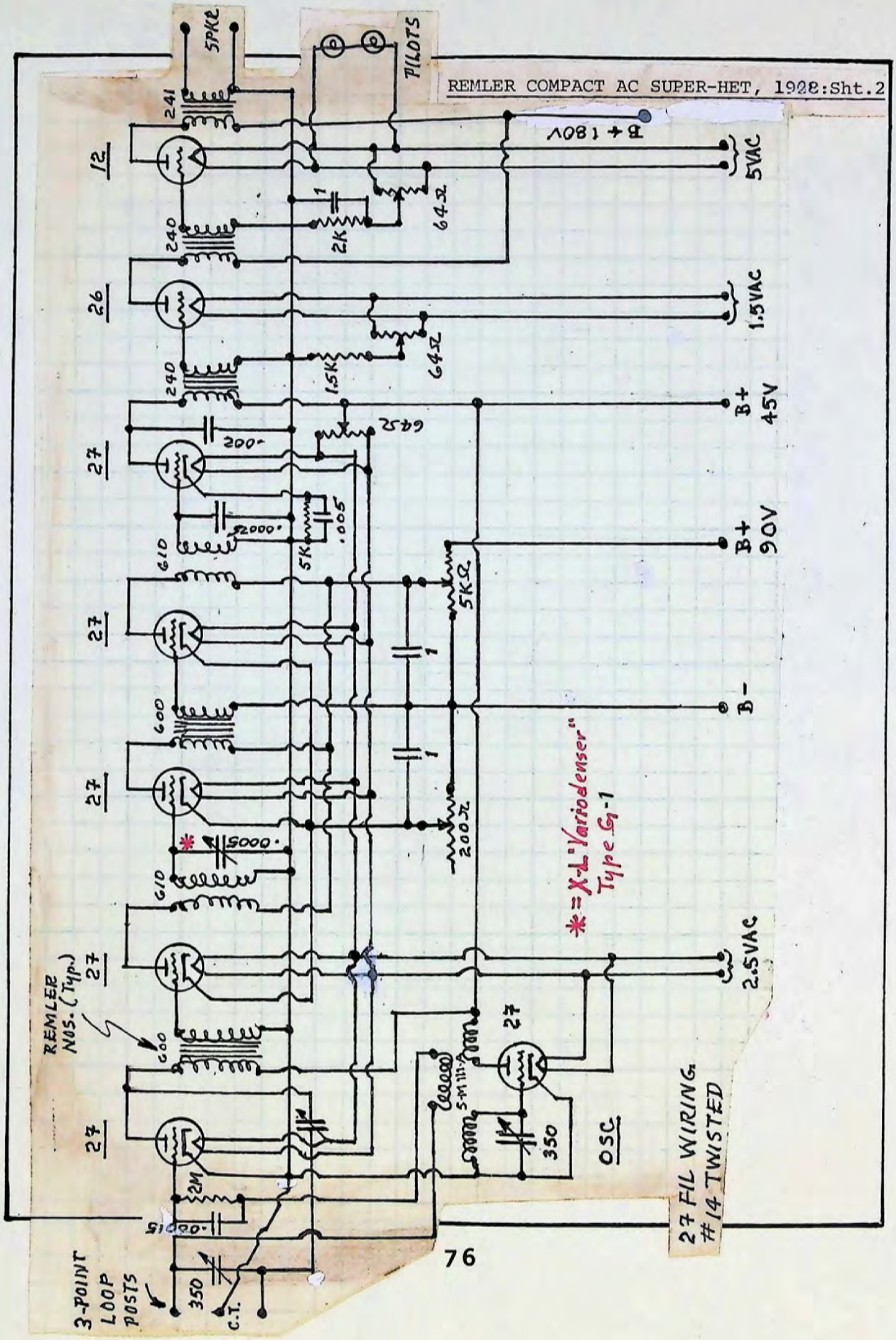
REMLER COMPACT AC SUPER-HET, 1928:Sht.2
SPKR
PILOTS
B+ 180V
5VAC
1.5VAC
B+ 45V
B+ 90V
B-
2.5VAC
12
26
27
241
240
610
600
2K
64Ω
1.5K
200-
2000-
.005
5K
5KΩ
200Ω
.0005
2M
.00015
350
C.T.
OSC
REMLER NOS. (Typ.)
3-POINT LOOP POSTS
27 FIL WIRING #14 TWISTED
*= "X-L" Variodenser Type G-1

REMLER AC COMPACT SUPER-HET, 1928: Sht.3

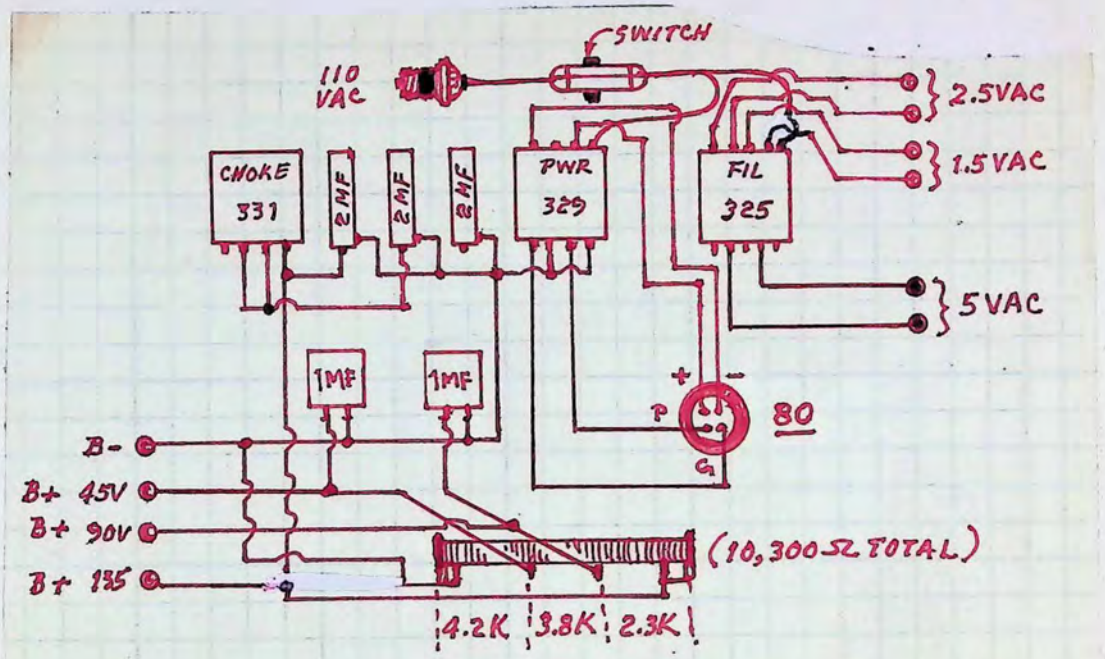

PICTORIAL DIAGRAM of POWER UNIT

Greater filtration can be had by substituting 8MF condensers for the 2MF condensers.

See Sht. 1 for actual layout of components.

Baseboard = 7" x 14" x 3/16" (Formica). [12" may be used.]
S-M 540 Sub-Panel Brackets(2).
Voltage Divider = Ward-Leonard #659.

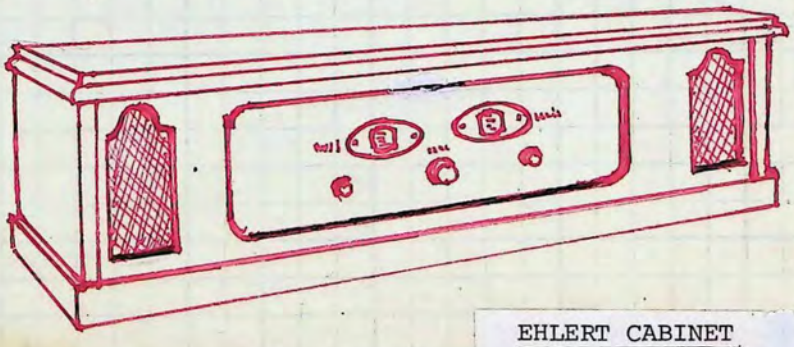

EHLERT CABINET

REMLER "111" BC RECEIVER, 1929;Sht.1

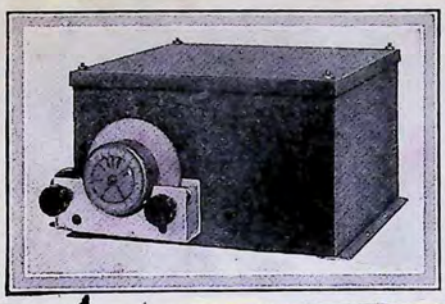

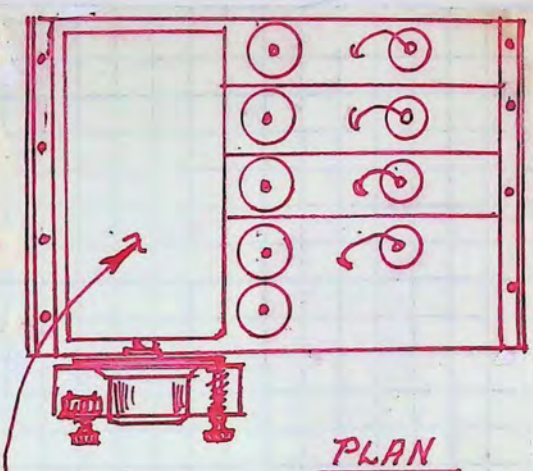

PLAN

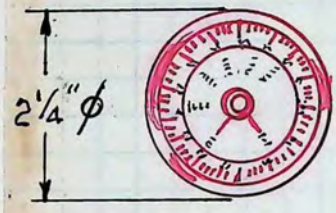

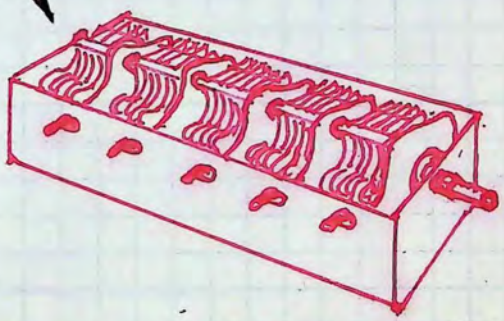

UNIQUE DIAL DESIGN
Illuminated Internally;
Principle BC Stations
Printed On Face.
Different Dials Were
Supplied For Different
Parts of the Country
By REMLER.

5-GANG VARIABLE
(Cover Removed)
Modified REMLER
Twin-Rotor Design.

RCVR. = 11" x 10⅛" x 6 1/16"
PWR. PACK = 17" x 6 3/16" x 6¼".

TUBE COMPLEMENT:
(4) 24
(2) 27
(2) 45
80

PWR. PACK CONTAINS AF AMP.

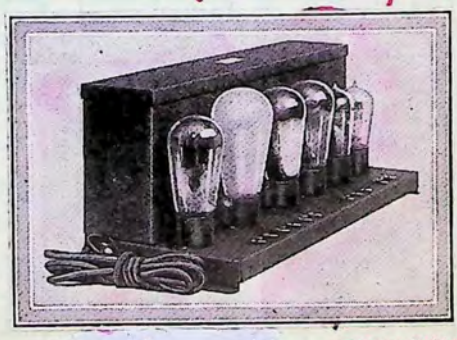

(See Sht. 3)

POWER PACK

(CB 9-29) (#80)

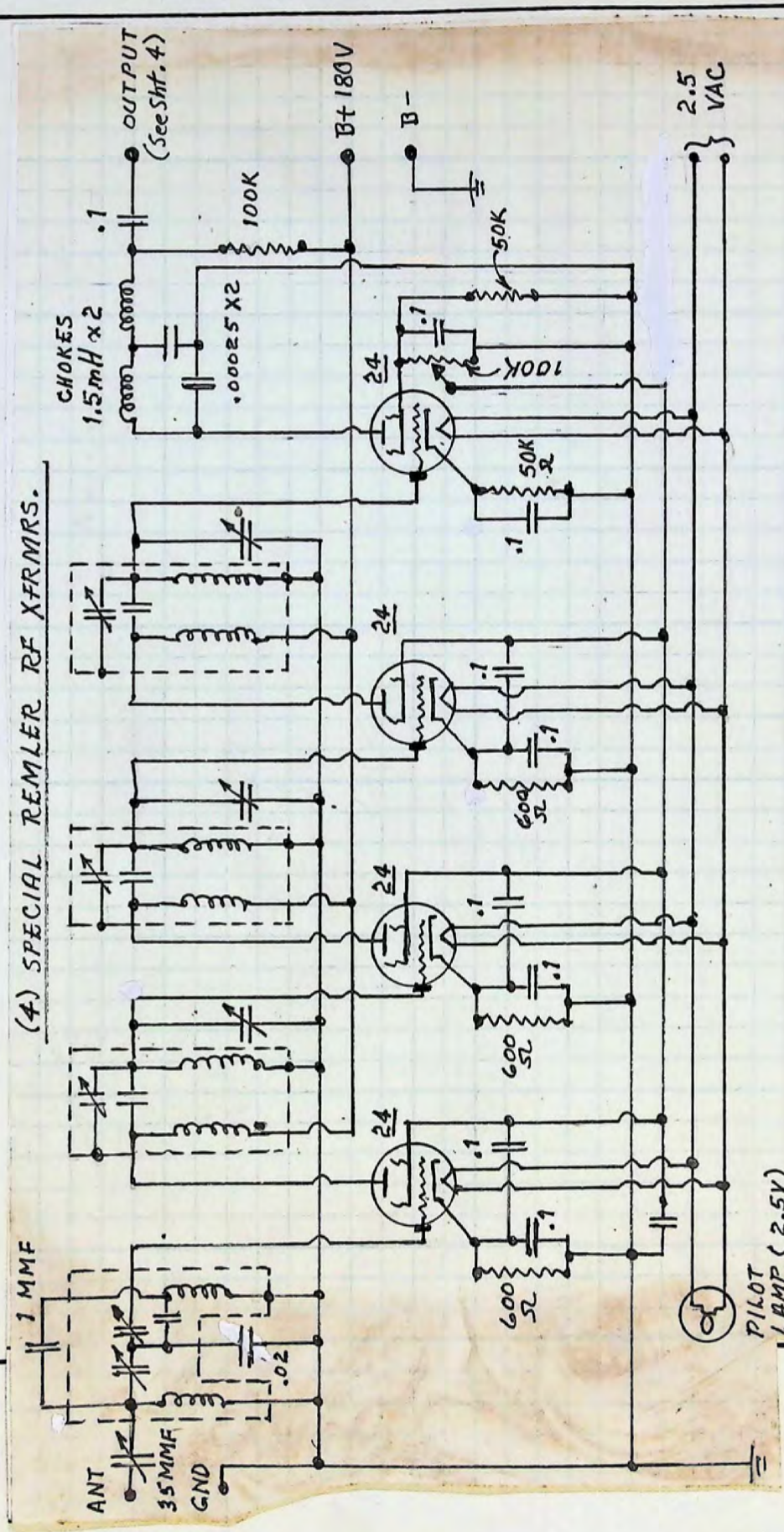

REMLER "111" BC RECEIVER
(A Most Peculiar Circuit)

NOTES: Lower end of dial scale is SLF; upper end of dial scale (around 300 meters) is SLW.

REMLER "111" BC RECEIVER, 1929; Sht.3

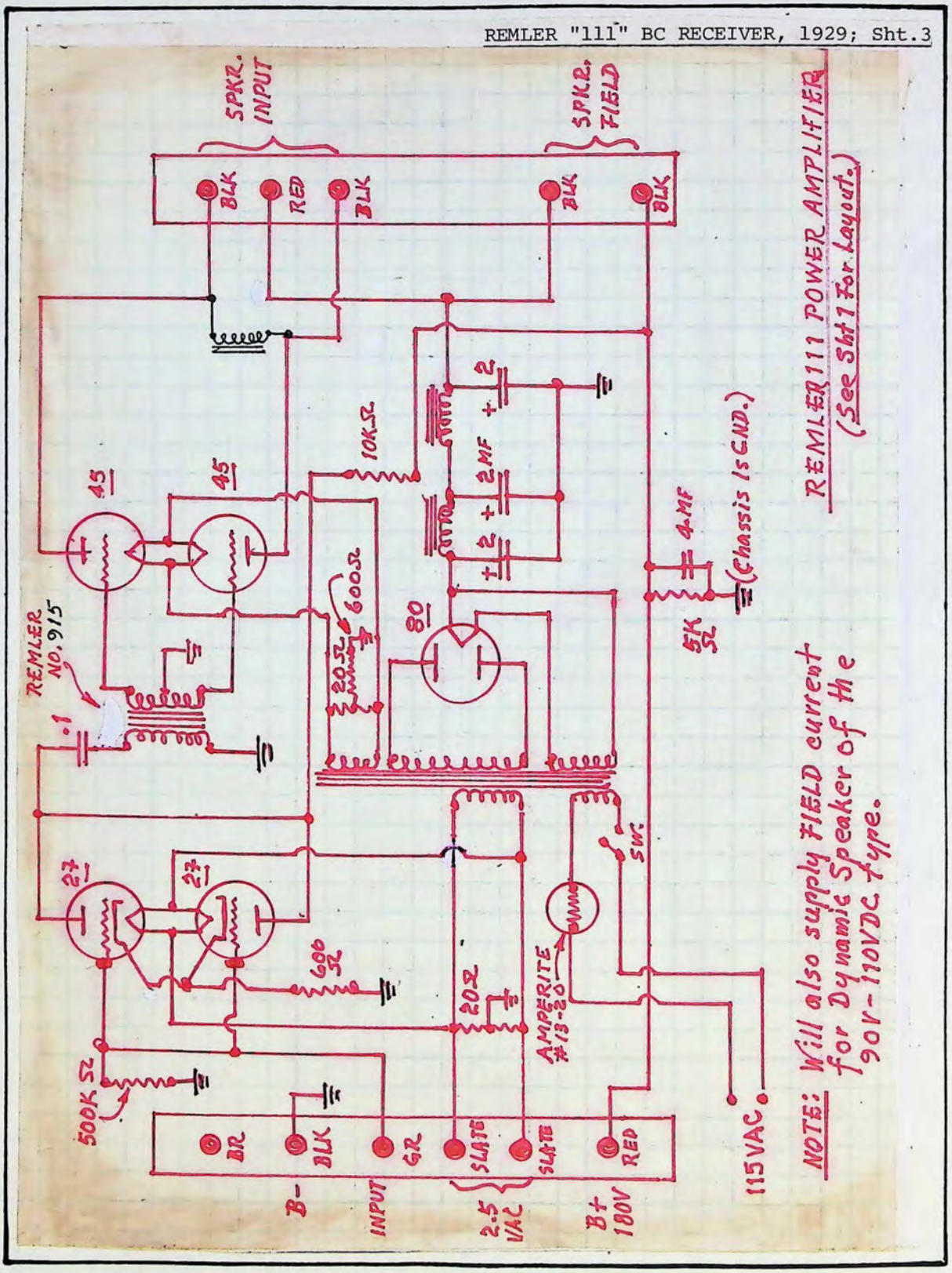

REMLER "111" BC RECEIVER, 1929; Sht.4

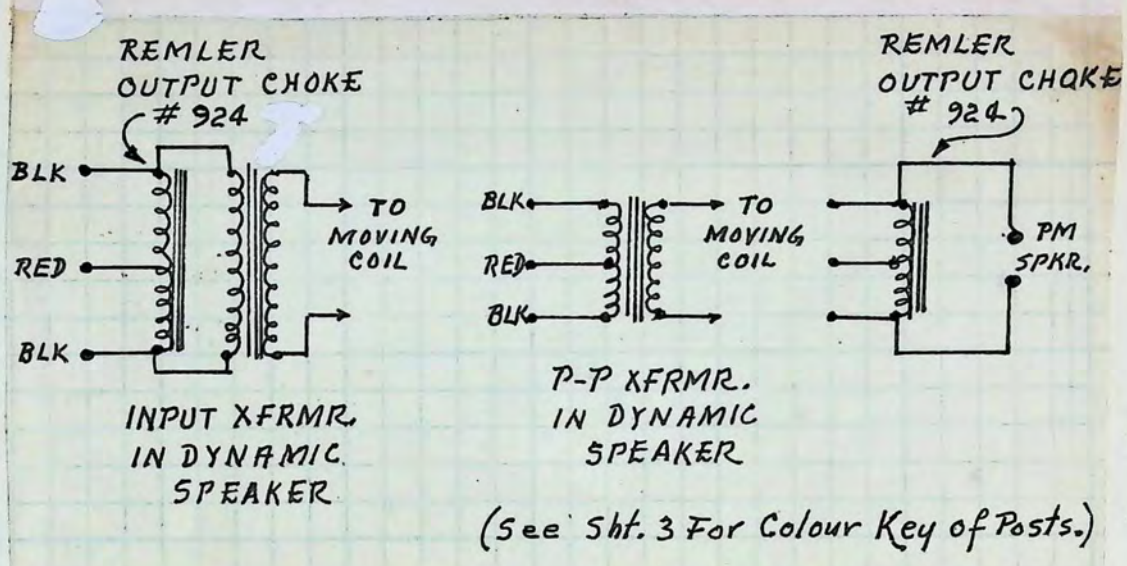

(See Sht. 3 For Colour Key of Posts.)

COUPLING "111" TO 3 KINDS of SPEAKERS

If a speaker w/ a seperate power supply for the Field is used, connect a 2K-Ohm, 30W, resistor in series with the leads otherwise going to the speaker.

NOTES:

1. ANT is coupled to 1st RF tube through a band-pass selector circuit of the capacity-coupled type.

2. A balancing condenser in the ANT permits compensating for the type of antenna used. This is the 35mmf variable shown on schematic.

3. The REMLER "111" made practically no impression on the Radio market, perhaps due in part to its unorthodox physical configuration, and the collapse of Wall Street three months after its introduction.

* * *
* *

REMLER DUAL-VARIABLE IDENTIFICATION

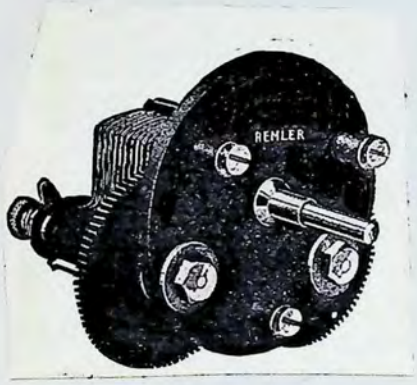

MODEL 621
(1926)

MODEL 639
(1927)

The REMLER dual-variable was one of the better innovations of variable condenser design in the mid-Twenties. It was applicable to any circuit calling for a 350 mmf condenser. Like all REMLER items, it was well-made, rugged, and when found today, usually in good shape.

The idea of a dual-variable was apparently not new with REMLER, in as much as the SIGNAL ELECTRIC people had designed and put on the market such a unit three years before, which is shown in Vol. V of these Sketch-Books. E.M.Sargent, Gerald Best, and REMLER were all associated in one way or another, and both REMLER and SIGNAL were operating in the San Francisco Bay area, so it is conceivable that the REMLER dual-variable evolved from the SIGNAL design.

You may find the REMLER unit at flea-markets with a few of the gear teeth broken off. It's a simple task to disassemble the unit and remove the Bakelite gears, then rotate them to where the broken teeth do not engage the little brass drive gear, and re-assemble.

* * *

THE REMLER DUAL S.L.F. VARIABLE CAPACITY UNIT

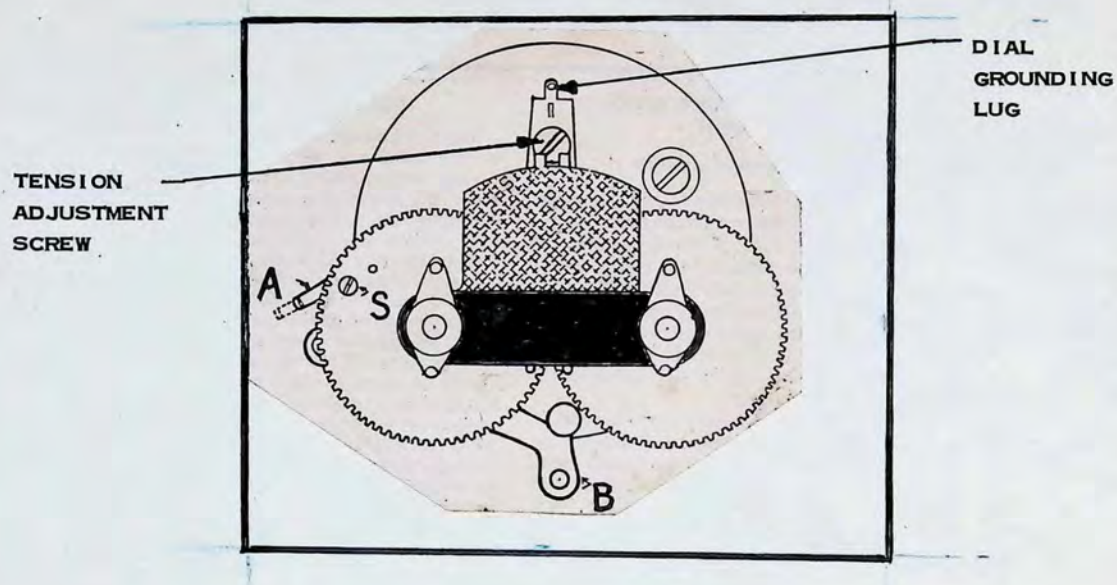

There were two models of the REMLER dual-variable unit - i.e., 621 and 639, 1925 and 1926, respectively. Model 621 was straight-forward in concept and operation as conventional variables of the day, and their installation and operation are obvious. Model 639 was a slight over-sophistication, and this is the model detailed here; a rear view of the unit is shown above.

Both models were designed for panel mounting; mounting them at an angle to the panel would upset the ability of the weighted plates and the tension spring to absorb all play between the Bakelite gear teeth. If the condenser turned too freely, friction was increased by tightening the adjustment screw just above the brass pinion gear.

In those circuits in which B+ was applied across the plates, protection from a short-circuit was obtained by connecting a .002 mfd fixed Mica condenser in series with the unit.

Some of the earlier models, both series, were supplied with a dial indicator as an extra protection for the Bakelite gear teeth. It was mounted on the front panel above the REMLER metal dial, and the projection lug on the dial engaged the dial stop. In later production, this

the dial indicator was dropt and the original mounting hole for it was deleted from the dial. My own experience suggests that nothing was lost.

Shielding was not necessary, as the shaft was "dead". The metal dial, however, could be grounded, if desired, by connecting a ground lead to the friction adjustment device and connecting it to either A- or GND. Grounding the dial in this manner helped in securing stable operation, and simplified balancing or neutralising.

MINIMUM CAPACITY ADJUSTMENT

Model 639 was provided with a minimum capacity adjustment: refer to the illustration. When lever "A" was in the full line position, the unit had its smallest value. By loosening screw "S" and shifting lever "A" towards the dotted line, capacity range was decreased. The maximum capacity of the unit was not affected.

The purpose of this adjustment was to facilitate two or more dials reading the same for a given wavelength. The adjustment was made by tuning in at the highest wavelength available to your circuit. You then arbitrarily selected one of the dials as a "standard", and left it alone. Loosen the other dial or dials on condenser shaft and, leaving the plates in position, shift the dial until it read as the standard.

Tighten the dial shaft set-screw, and tune to the lowest wavelength. Leaving the standard dial alone, adjust lever "A" of the other unit or units until their dials reads the same as the standard. Again tighten the dialshaft set-screw or screws, and that's it.

GANG-MOUNTING

Lug "B" shown on the illustration was provided to simplify gang-mounting and single-dial control of S.L.F. condensers. This was affaected by re oving the cams from the driven condensers and joining lugs "B" by means of brass bars of suitable length. Caution: do not use steel bars.

* * *
* *
*

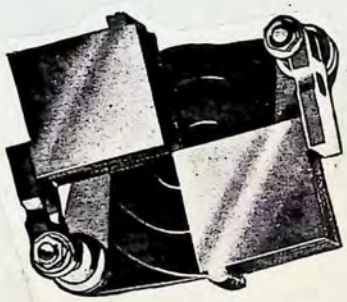

SIGNAL
$5.50 - 1924

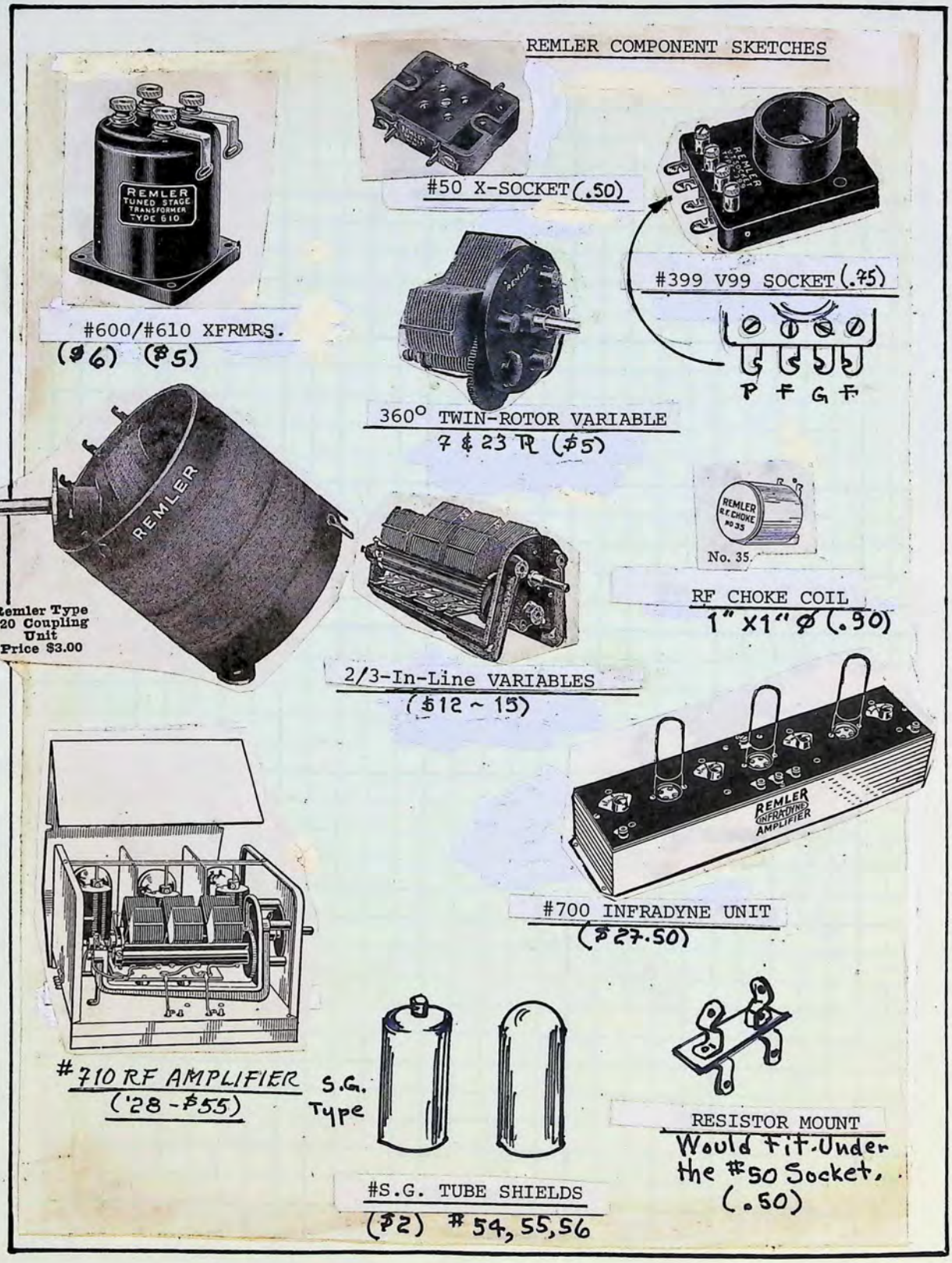
REMLER COMPONENT SKETCHES
REMLER TUNED STAGE TRANSFORMER TYPE 610
#600/#610 XFRMRS.
($6) ($5)
#50 X-SOCKET (.50)
#399 V99 SOCKET (.75)
P F G F
360° TWIN-ROTOR VARIABLE
7 & 23 PR ($5)
REMLER
Remler Type 620 Coupling Unit Price $3.00
REMLER R.F. CHOKE NO 35
No. 35.
RF CHOKE COIL
1" x 1" Ø (.90)
2/3-In-Line VARIABLES
($12 ~ 15)
REMLER INFRADYNE AMPLIFIER
#700 INFRADYNE UNIT
($27.50)
#710 RF AMPLIFIER
('28 - $55)
S.G. Type
RESISTOR MOUNT
Would fit Under the #50 Socket.
(.50)
#S.G. TUBE SHIELDS
($2) #54, 55, 56

REMLER COMPONENT SKETCHES

115 KC INDUCTANCE

($4)

OUTPUT COMPENSATING XFRMR.

#922 ($10)

PLUG-IN COILS

200-550 Meters
w/ 350 MMF VARIABLE
#550, 551, 560
#561, 562, 570

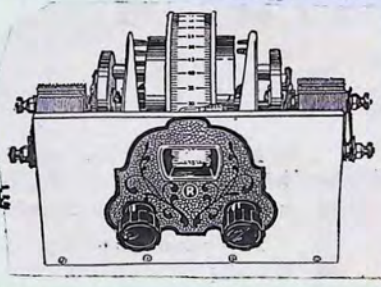

DRUMDIAL ASSY.

#900 Series AF XFRMRS.

#900, 901, 920, 928
($8 ~ $12)

REMLER 4"ϕ
200° DIAL
(1925)

(See Also Somerville Pattern.)
Silk-Screen On Aluminum:
Later model was German
Silver on brass.

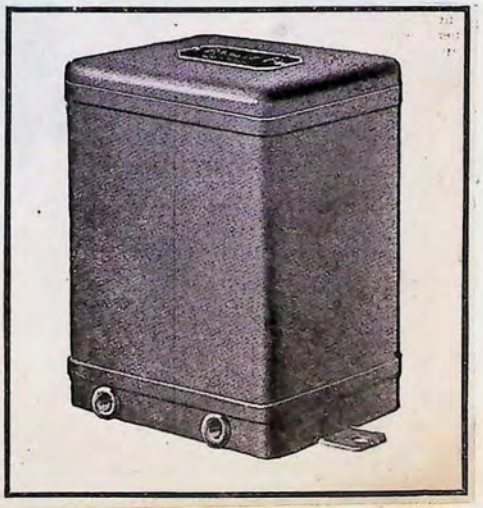

NOTE:
Early REMLER components not depicted here.

SARGENT-RAYMENT "STATION ISOLATOR"

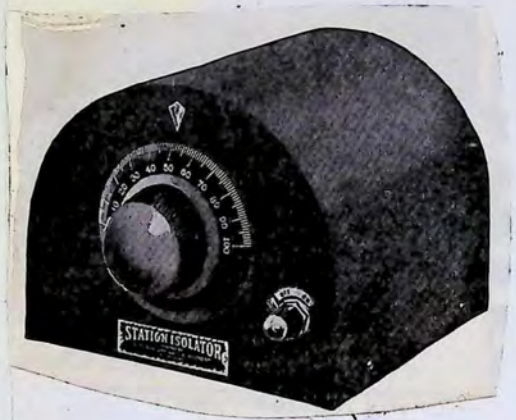

General Notes:

Sold in 1928 at $17.50, less tube.
Range = 200 to 500 meters.
Copper casing, brown wrinkle finish.

Complement:

AMSCO Allocating variable.
Low-loss tuning coil.
Inductance coil.
RFC.
Resistors.
ON-OFF switch.
Tube socket.
Binding posts on rere panel.
Tube inserted from bottom.

(May be used as a shielded RF stage before ANT post onset, w/ switch OFF.)

COVER REMOVED:

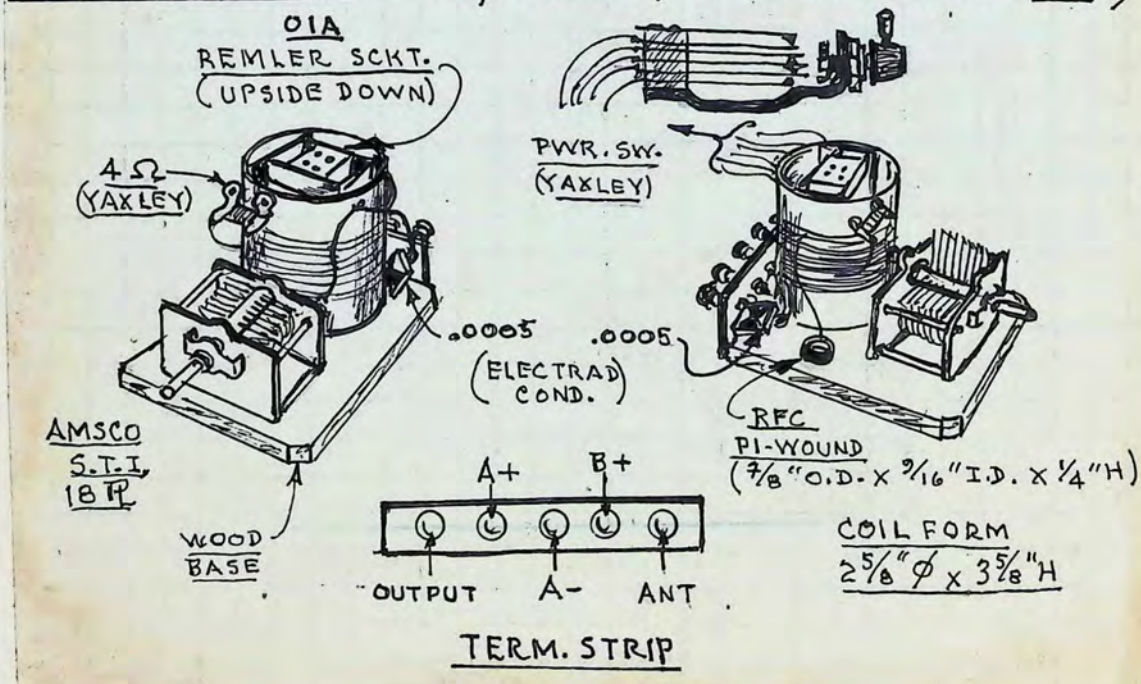

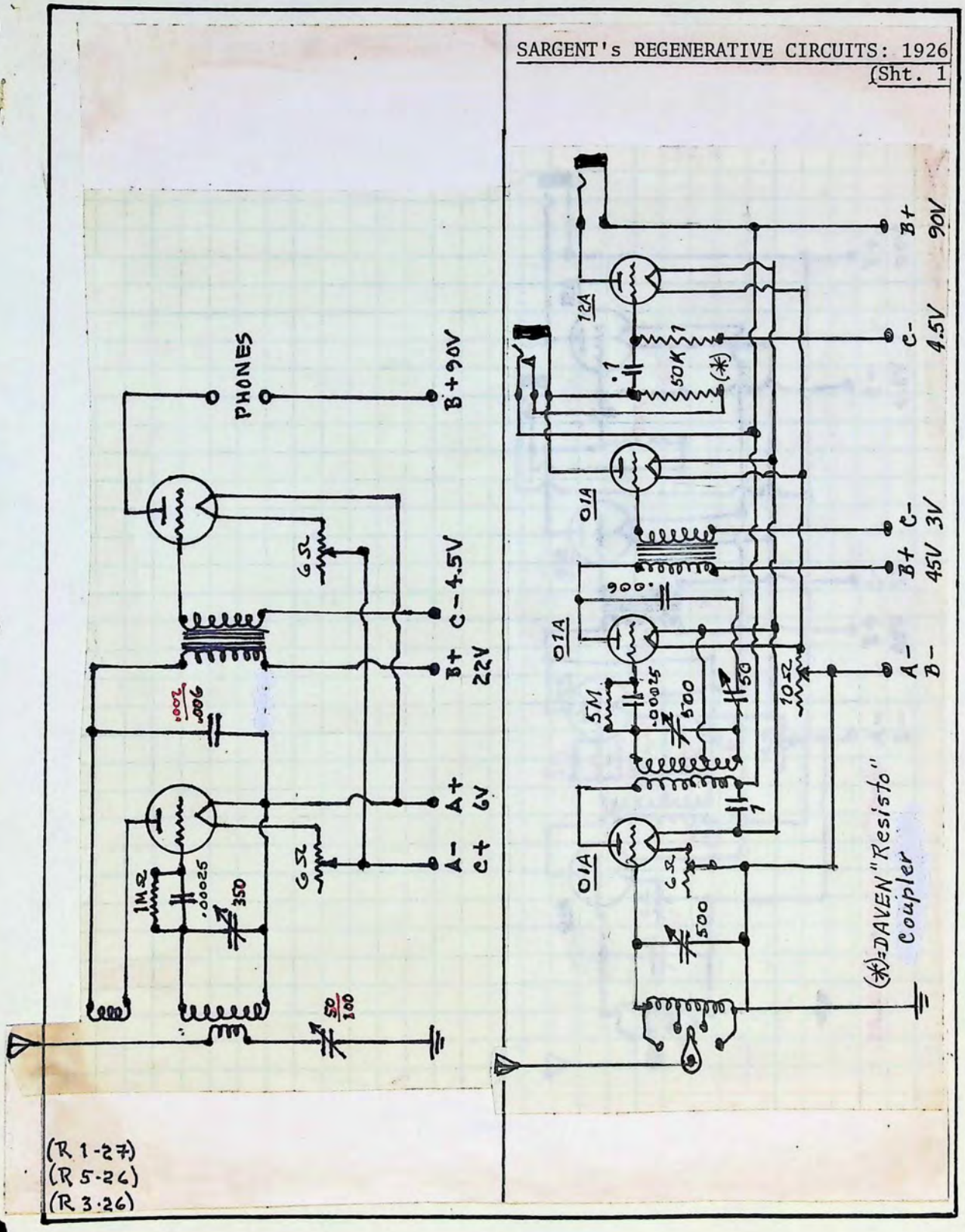
SARGENT's REGENERATIVE CIRCUITS: 1926
(Sht. 1
PHONES
B+90V
6Ω
C-4.5V
B+ 22V
.002
.006
A+ 6V
A- C+
1MΩ
.00025
350
6Ω
50/100
12A
.1
50K
(*)
01A
.006
01A
5M
.00025
500
50
1
01A
6Ω
500
10Ω
B+ 90V
C- 4.5V
B+ C- 45V 3V
A- B-
(*)=DAVEN "Resisto" Coupler
(R 1-27)
(R 5-26)
(R 3-26)

SARGENT's REGENERATIVE CIRCUITS; 1926
(Sht. 2)

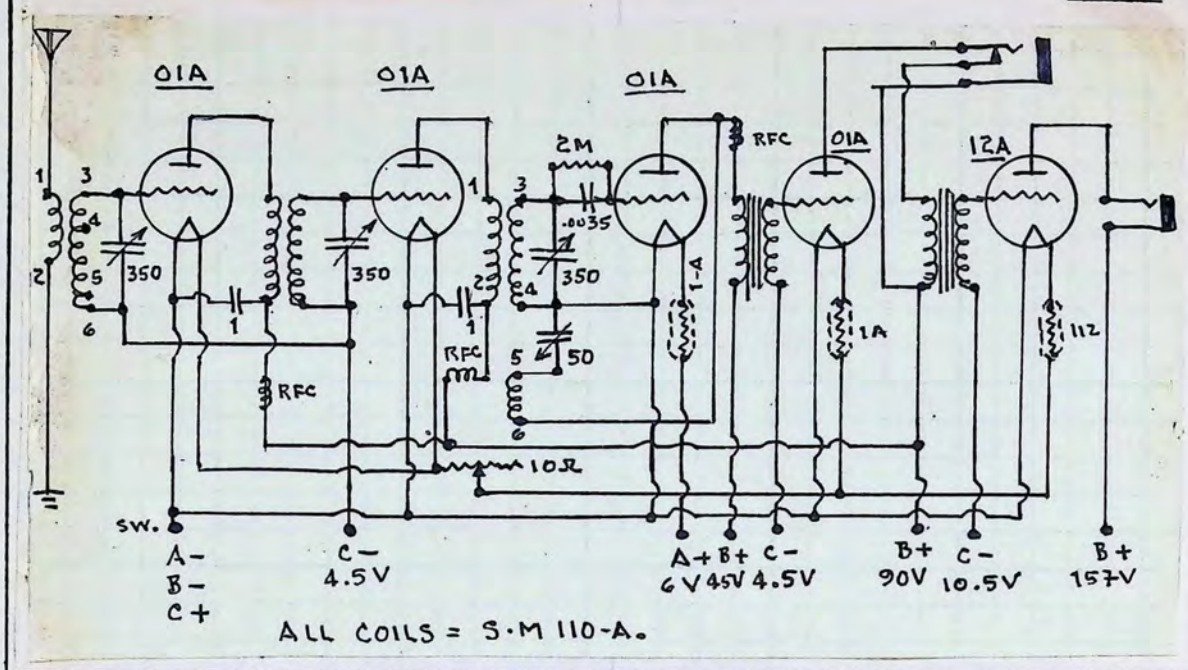

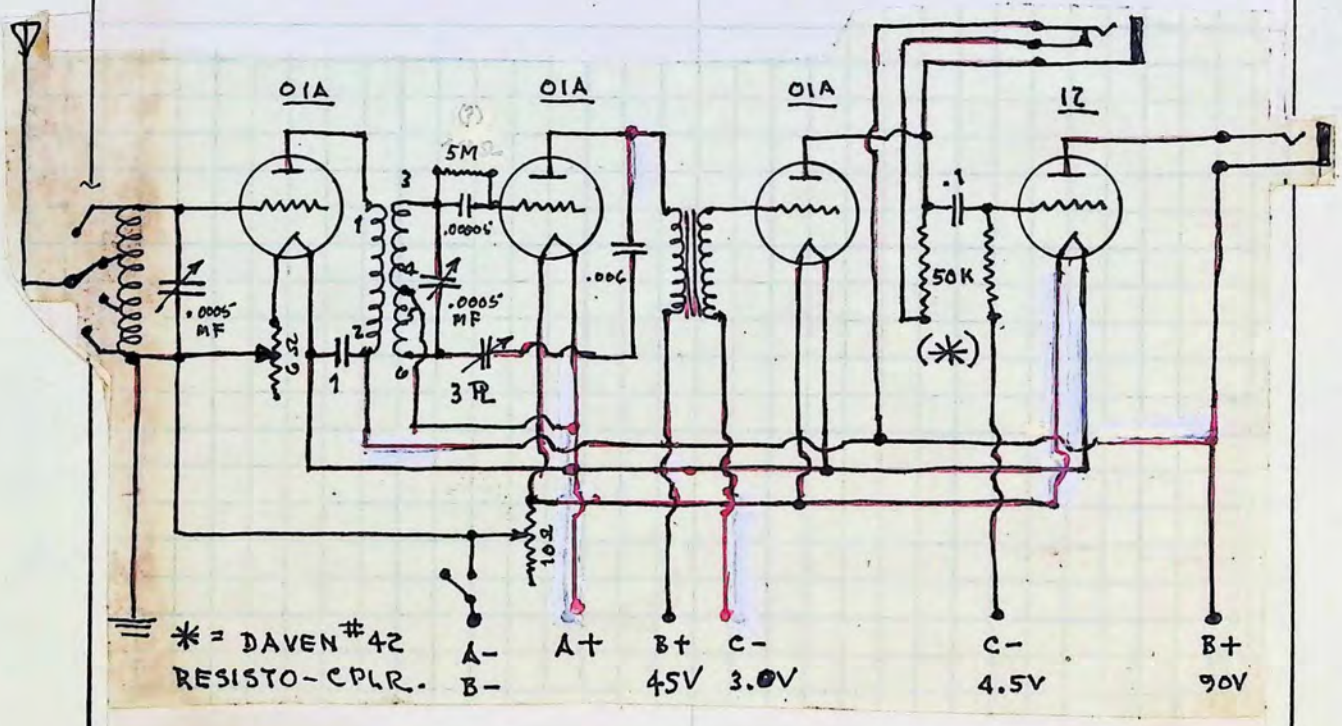

CIRCUIT No 4

SARGENT DX-RANGER, 1932; Sht. 1

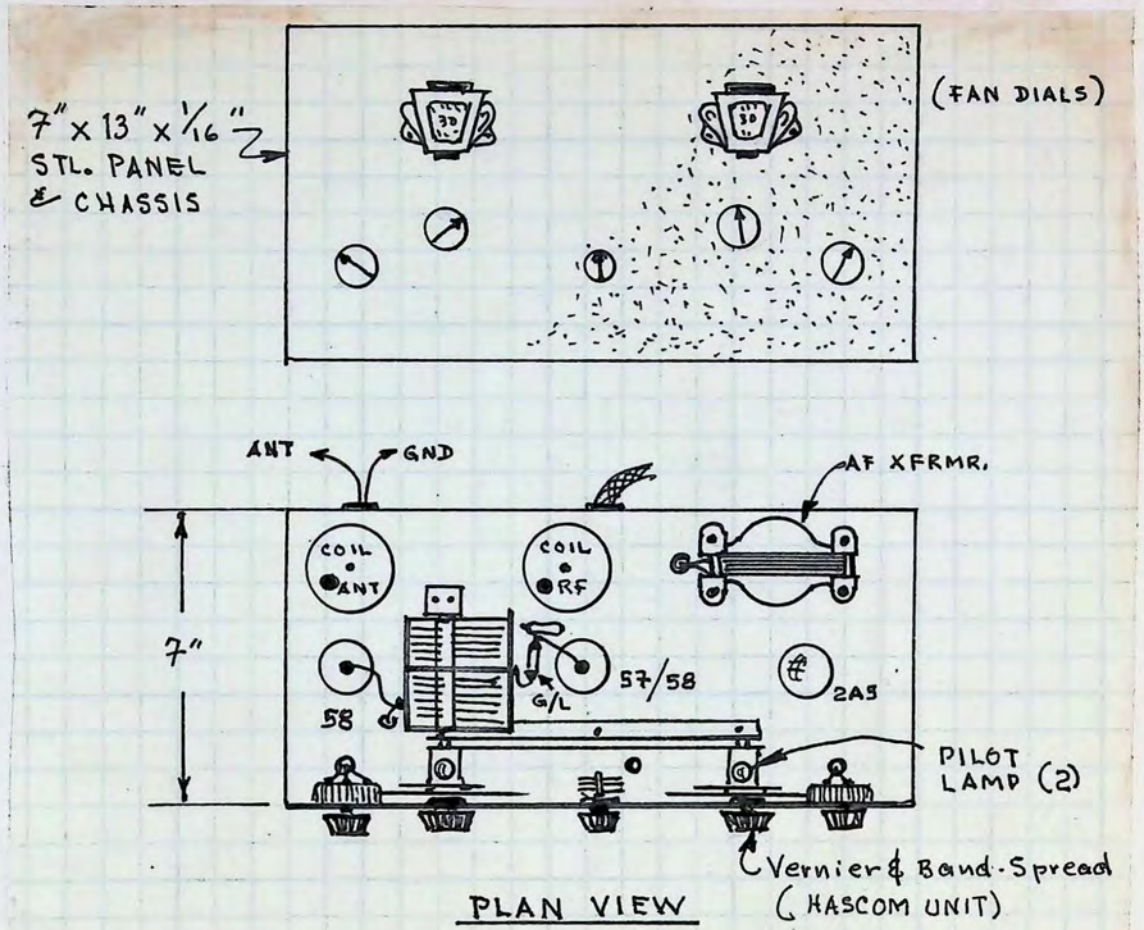

Originally kitted by E.M.Sargent for $15.
Inverted U-shaped chassis.
Early RCA AF xfrmr. used.
Black wrinkle finish on panel.

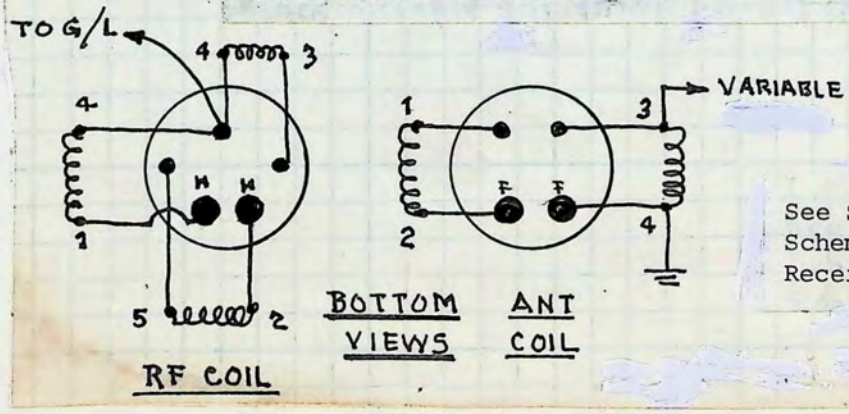

See Sht. 2 For Schematic of Receiver.

SARGENT DX-RANGER, 1932, Sht. 2

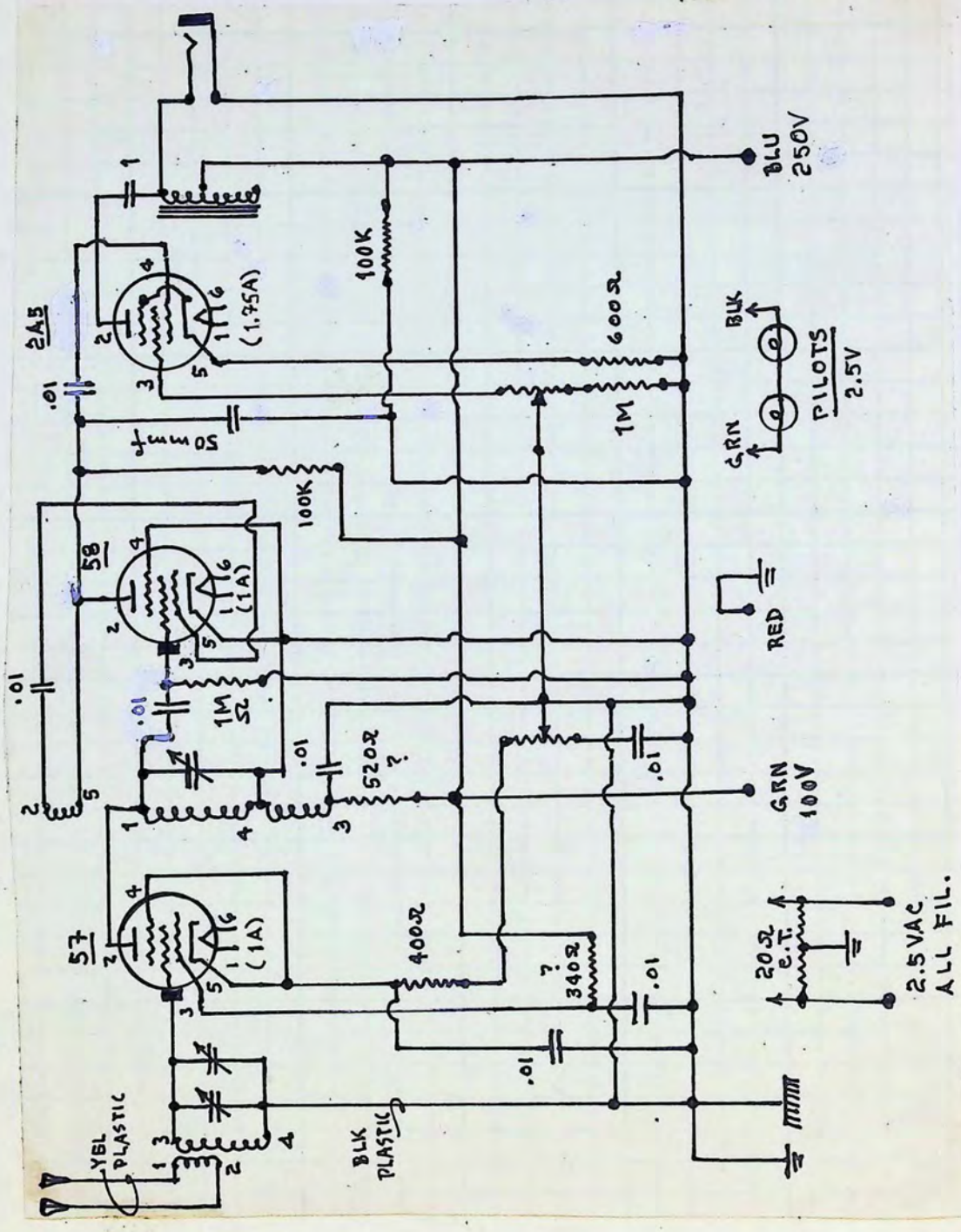

THE SARGENT 9-33 ALL-WAVE SUPER-HET, 1933

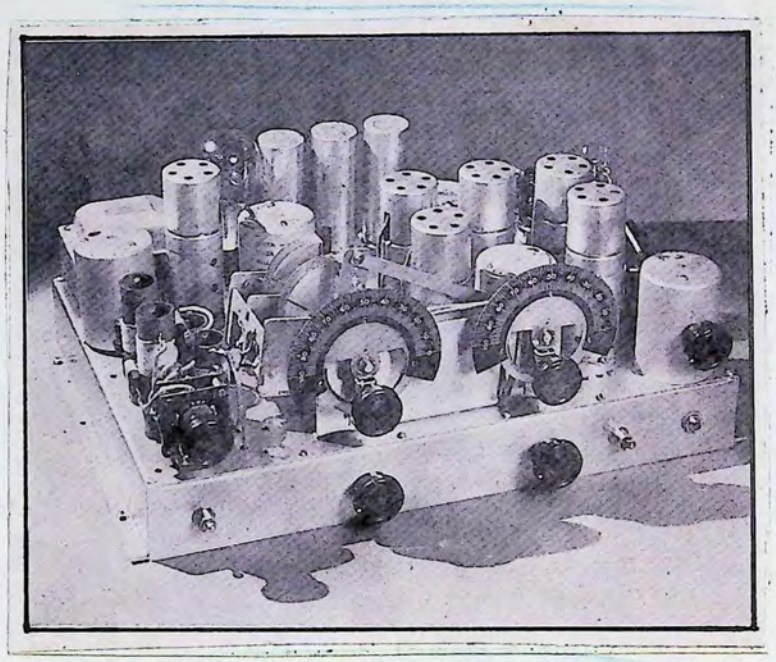

Range was from 10 to 550 meters, and was the first dual conversion super-het. It had a novel band-spread, being a tuning variable mounted in a "cradle" instead of the usual rigid mounting. It is shown at the left above.

The RH dial moved the stator through a very small angle to ultra-fine tune a signal. This was the principle for the HASCOM unit of 1927, and was also utilised by Sargent for his "DX-Ranger" SW receiver.

The SARGENT 9-33 unit is placed here to show Sargent's on-going interest in Radio, and to round out the story.

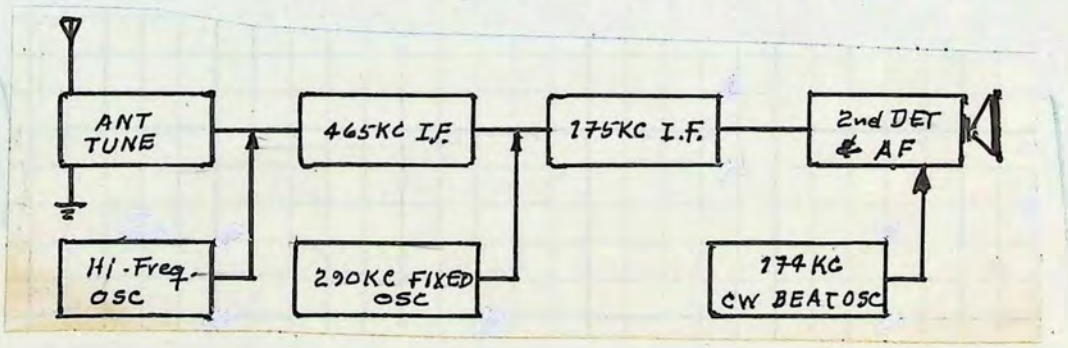

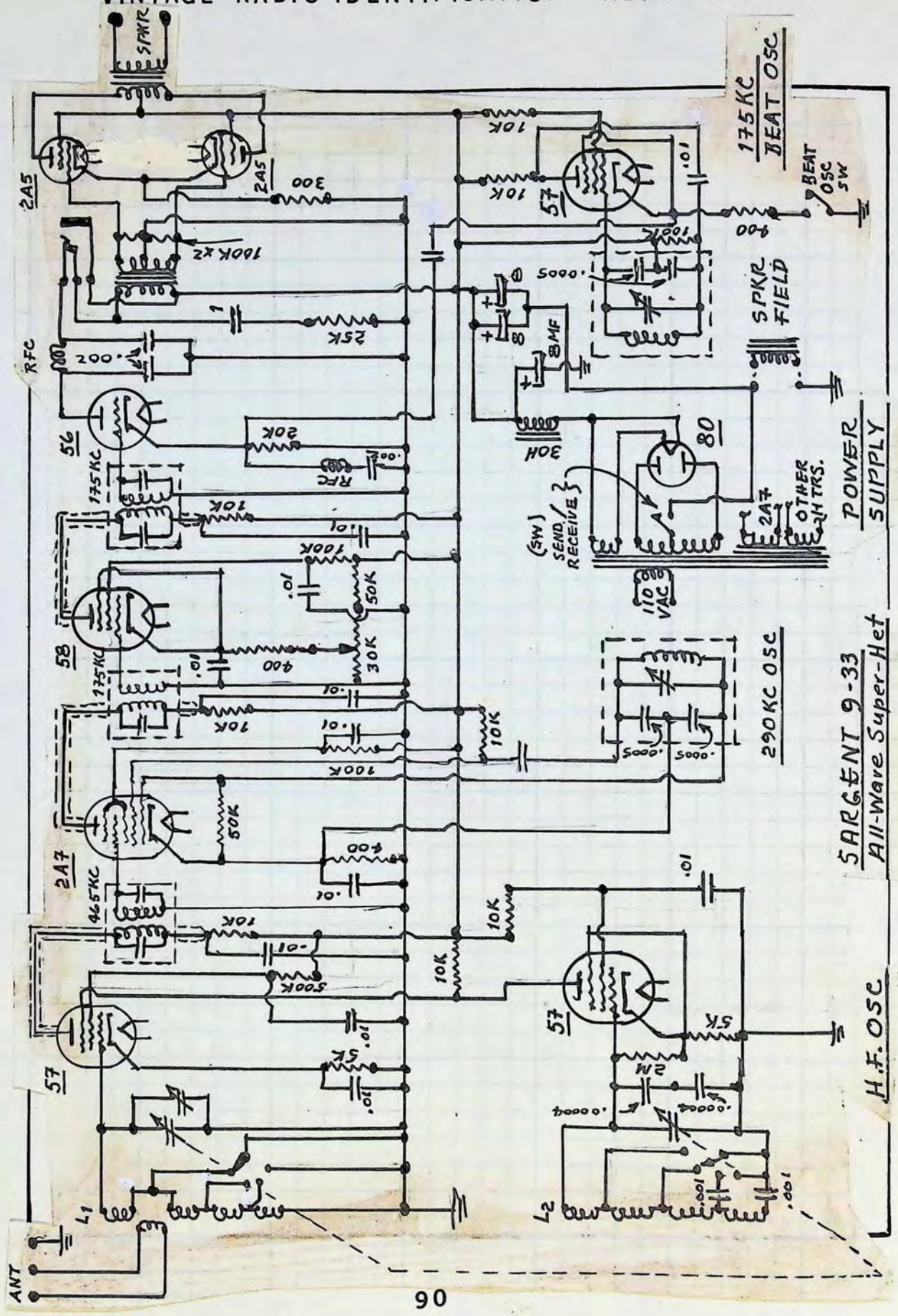
SPKR
2A5
2A5
300
100K x2
1
25K
RFC
200
56
20K
RFC
.001
175KC
10K
.01
100K
58
175KC
.01
400
50K
30K
.01
10K
10K
100K
2A7
50K
400
465KC
10K
500K
57
.01
5K
.01
L1
ANT
57
10K
10K
100K
400
175KC
BEAT OSC
BEAT OSC SW
5000
SPKR FIELD
8
8MF
30H
80
(SW) SEND/RECEIVE
110 VAC
2A7
OTHER HTRS.
POWER SUPPLY
290KC OSC
5000
5000
.01
57
5K
2M
.00004
.00004
L2
.001
.001
SARGENT 9-33
All-Wave Super-Het
H.F. OSC

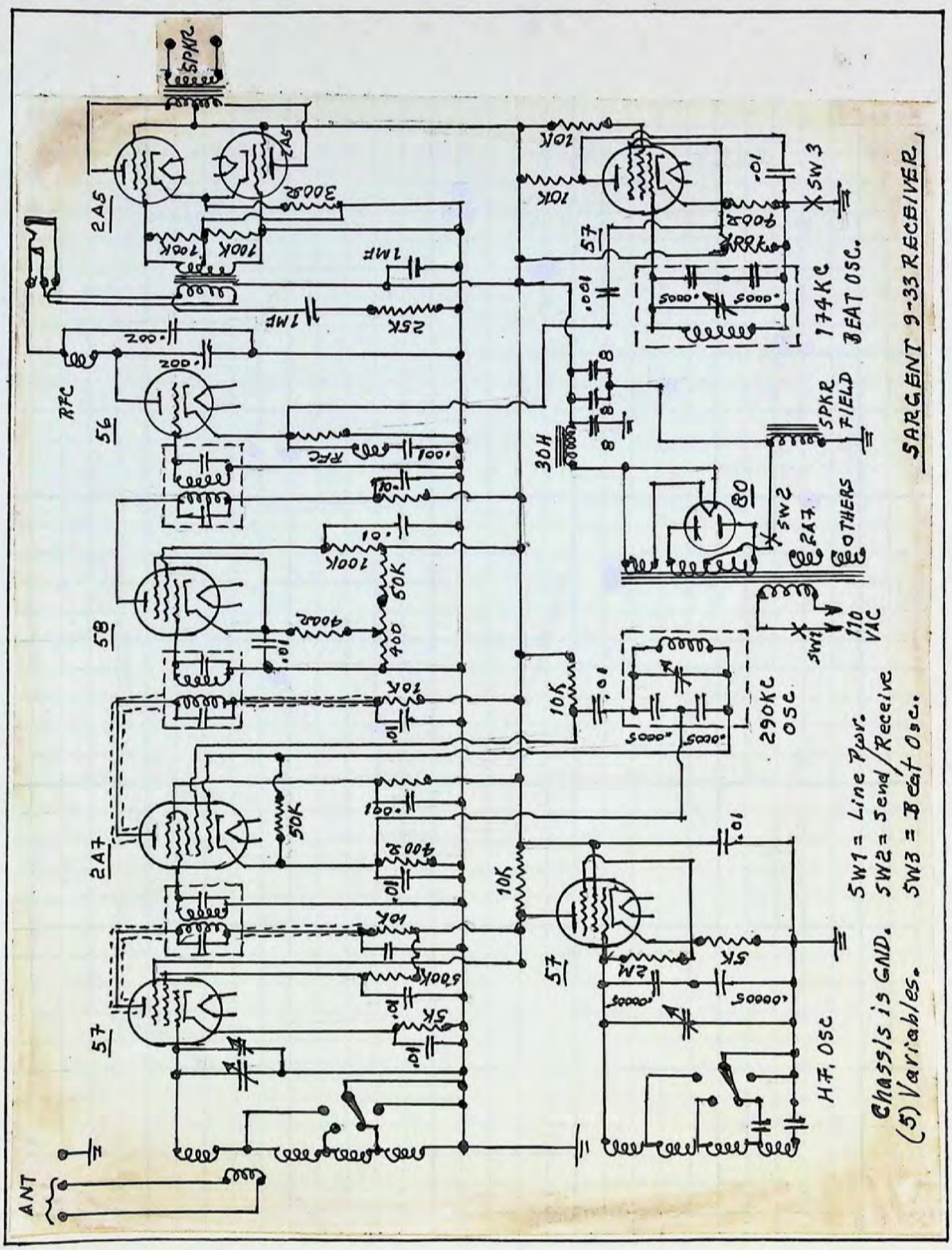
SARGENT 9-33 RECEIVER
SW1 = Line Pwr.
SW2 = Send/Receive
SW3 = Beat Osc.
Chassis is GND.
(5) Variables.
174KC BEAT OSC.
290KC OSC
H.F. OSC
SPKR FIELD
OTHERS
110 VAC
SPKR
ANT
2A5
56
58
2A7
57
80
RFC
30H

SARGENT 9-33; Sht. 3

DESIGN HIGHLIGHTS:

1. The 1st IF stage was 465 KC, for image suppression.
2. The fixed OSC was adjusted to 290 KC, which beat with the 465 KC to produce a 2nd IF of 175 KC.
3. The two IF stages were on different frequencies, with no tendency for interlocking due to regeneration.
4. The RFC was not critical - 1 mH was about right.
5. Coil sexions were connected in series and spaced to obviate coupling. Unused turns were shorted out.
6. The 290 KC fixed-oscillator used a "high C" circuit - i.e., high ratio of capacitance to inductance, for stability.
7. Leads to all RF and DET sockets were by-passed with individual inductance condensers and isolated by resistors.
8. The cathode of the beat-oscillator had no grounding condenser, but was coupled through the .001 condenser to the cathode of the 56. This cathode was grounded for AF purposes through an RFC and a 1 MF condenser.
9. The receiver was thoroughly shielded, with a metal plate under the chassis and box-shields over coils & tap-switches.
10. Single-point grounding was used for each set of circuits.
11. The OSC was electron-coupled.
12. Tube Complement:

OSC, 1st DET, CW Beat-OSC.	= 57.
175 KC IF Stage	= 58
465 KC Stage	= 2A7
2nd DET	= 56
P-P AF Output	= 2A5

13. Jack in the plate circuit of the 56 permitted use of phones.
14. Both dials tuned the same variables, thus were never used simultaneously, which was odd enough.
15. The upper LH knob operated the 2-sexion tap-switch, which changed the ANT frequency-bands and OSC at the same time.
16. The RH knob was the Tone-Control.
17. In the lower row of controls, L to R = B-circuit-breaker, VOL control, CW beat-OSC, phone jack.
18. Range = 15 to 550 meters (550 to 20,000 KC).

* * *
* *
*

SARGENT 9-33; Sht. 4

MAIN PARTS LIST

Condensers:

.01 MF (13)
.001 MF (3)
.002 MF (3)
.005 MF
.0005 MF (4)
.00005 MF(2)

8 MFD (3)

RFC (2)
Power Transformer
P-P "
P-P Output Xfrmr.

3-Point Jack
Speaker Tips (2)

Resistors:

300 Ohms
400 " (3)
5K " (2)
10K " (8)
20K "
25K "
30K " (Pot.)
50K " (2)
100K " (5)
500K "
2M "

174 KC Beat Oscillator
290 KC Oscillator
H.F. Oscillator

Switches (3)

Shielded leads at 1st DET (57) and 1st RF (2A7), as shown.

Steel chassis and shields.

* * *
* *
*

Announcing—

THE OPENING OF
Oakland's Largest and Exclusive
RADIO SUPPLY HOUSE

On October 1, 1922
BY
E. M. SARGENT

The Following Lines Will Be Handled:

DUBILIER	MAGNAVOX
BRANDES	FEDERAL
PARAGON	WESTERN ELECTRIC

AND MANY OTHERS

RADIO SERVICE CO., INC.
OAKLAND, CALIFORNIA

SARGENT REGENERATIVE PRE-SELECTOR, 1934;Sht.1

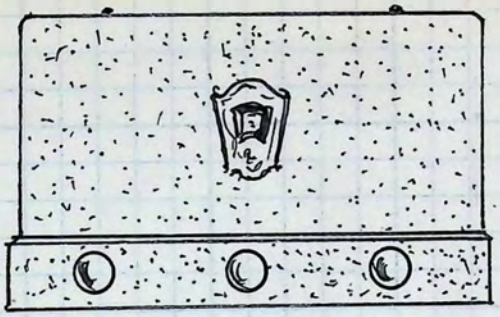

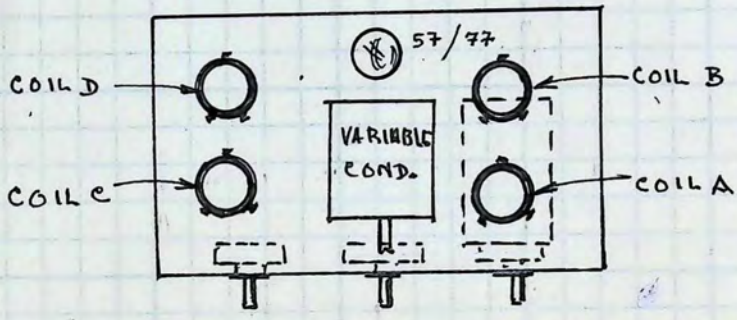

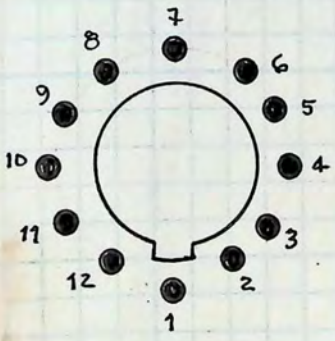

CHANGE-OVER SWITCH LUG POSITIONS

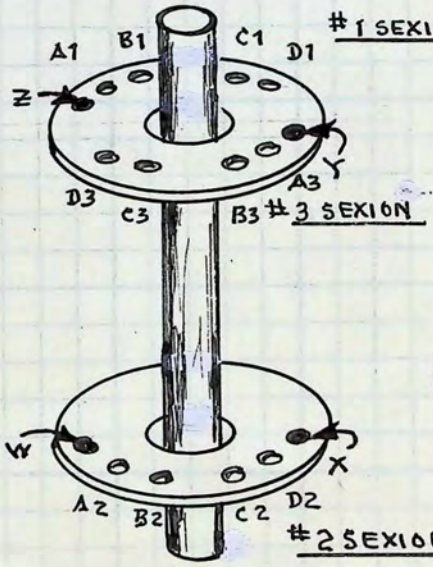

BAND-SWITCH LUG POSITIONS

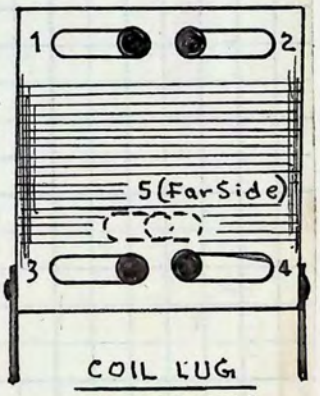

COIL LUG POSITIONS (TYP.)

(E.M.S. B/P)

SARGENT REGENERATIVE PRE-SELECTOR, 1934;Sht.2

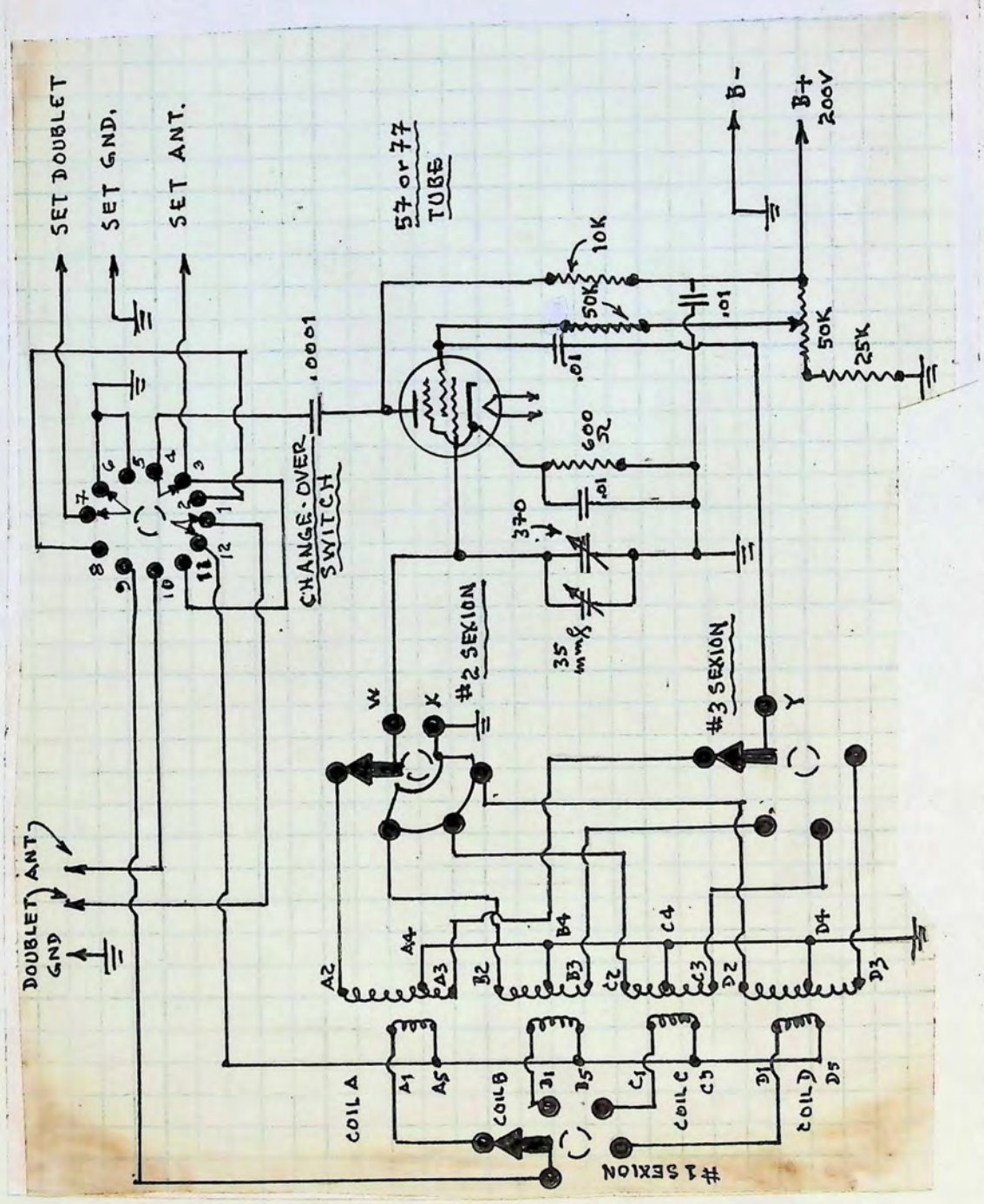

SARGENT COMMUNICATIONS RECEIVER, 1934; Sht.1

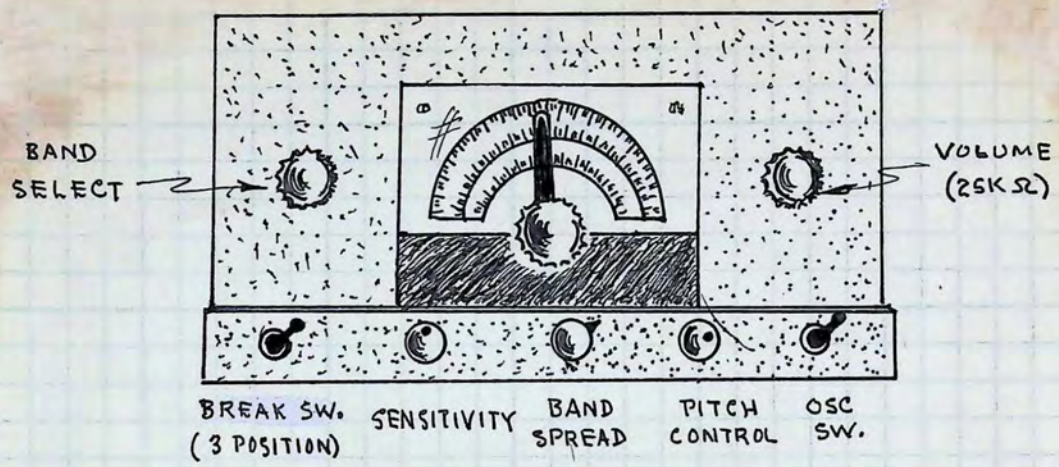

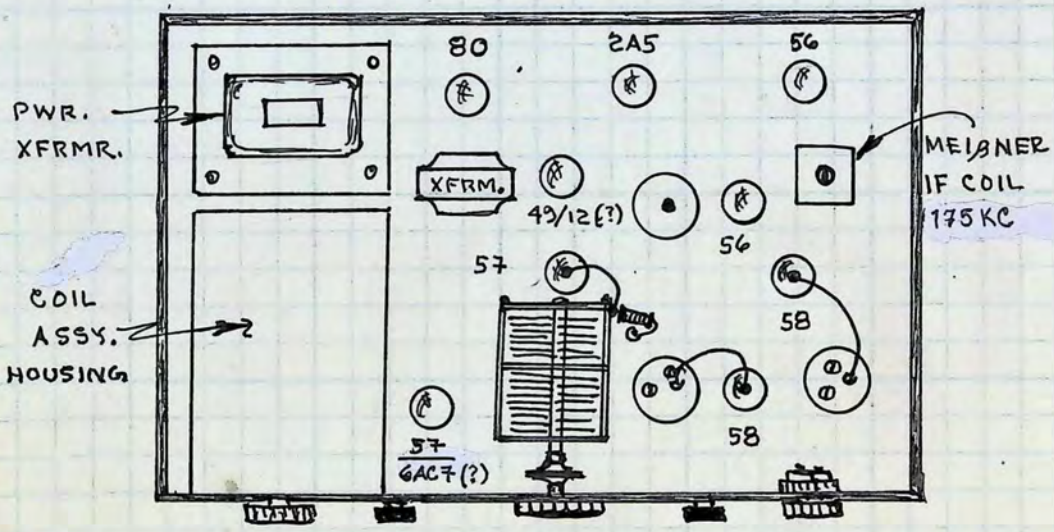

TOP COVER REMOVED

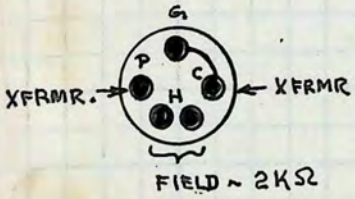

SPKR. PLUG
Looking @ Prong End.

VARIABLE = 370 mmf each sexion
IF XFRMRS. = 465KC (X 3)
AC SW. ALSO BREAK SW.
RFC = 4.4 mH (2nd DET PL)

NOTE

THIS MODEL ALSO USED FOR MARINE & EUROPE EXPORT, BY ADDITION OF 2 COILS.

(E.M.S. B/P)

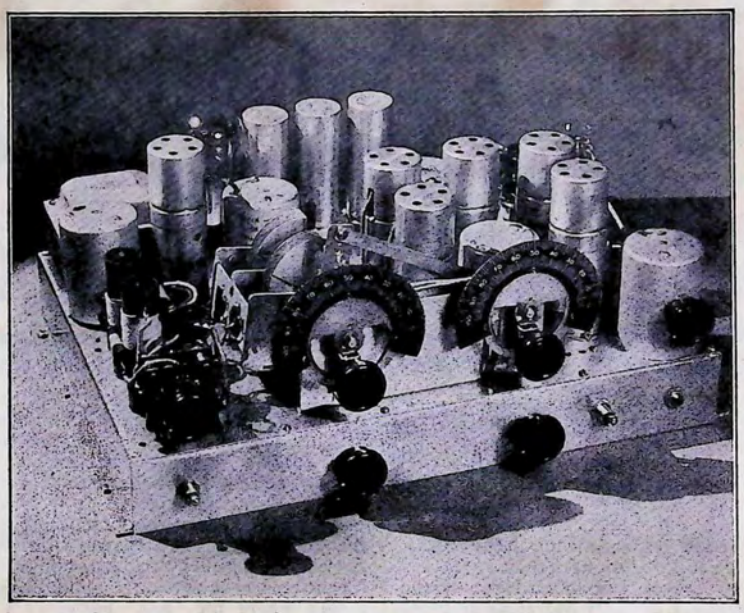

"SARGENT 9-33"

ALL-WAVE SUPER RECEIVER

15 TO 550 METERS

SARGENT 9-33 ALL-WAVE RECEIVER

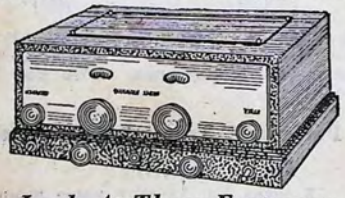

Look At These Features:

- Wavelength Range 15-550 Meters
- Double Shift I.F. System
- Sargent Band Spreader, all waves
- Large Tuning Knobs
- Antenna Trimmer
- Tap Switch for changing Wave Bands
- Separate C.W. Oscillator
- Headphone Jack
- Tone Control
- Push-pull 2A5s in output stage
- Rugged, all-steel construction
- Polished aluminum panel
- Complete isolation, all R.F. circuits
- Single-Signal selectivity
- Exceptionally low noise level
- No "Frequency Creep"
- Self-contained Power Pack
- Straight Antenna or Doublet

Send Stamp for Descriptive Circular.

Tubes and Speaker extra. Requires dynamic speaker 1700 or 2500 ohm field wired for push-pull 2A5s, and the following tubes: 1—80, 1—56, 1—58, 1—2A7, 2—2A5s, 3—57s. IMMEDIATE DELIVERY—ORDER YOURS TODAY.

AMATEUR NET PRICE

$69.50

Sargent DX Ranger

A high grade, 2-tube regenerative receiver built for the quality buyer and the advanced amateur. For A.C. uses one 57, one 2A5, for D.C. one 77, one 41 tube. Same band spread system as on the Sargent 9-33. Smooth, "non-squawk" regeneration control. High quality, illuminated tuning dials. Humless. 15-200 meter plug-in coils included, broadcast coil 75c extra, amateur net price. Every U. S. district on 75 meter phone, and foreign broadcasts heard from San Francisco.

Sold as a kit, with chassis plated, drilled and stamped, panel finished in beautiful crystalline lacquer, complete instructions and blueprints for assembly and wiring. All screws, hardware, everything you need is furnished.

DX Ranger Kit, Amateur Net Price..... **$12.50**

DX Ranger, assembled, wired and tested. Amateur Net Price **$15.75**

DX Ranger Power Pack, wired, ready for use, 250 volts, 50 mils. Amateur Net Price..... **$7.50**

Immediate Delivery—Order Yours Today

DEALERS—WRITE

E. M. SARGENT CO.

Sold by Dealers Everywhere **2085 Broadway, Oakland, Calif.**

Beyond Rider!

The author and the publishers take pleasure in announcing that Howard W. Granoff has been selected as the exclusive distributor for United States sales of these unique Sketch-Books and Monographs, and other related writings of the author - D.H.MOORE.

Comments and suggestions from readers of these dedicated works are always welcome, and will be given an immediate hearing, with an eye to improving future editions. While these unique Sketch-Books and Monographs are the labour of one man, the vintage radio hobby remains, as with any legitimate hobby, a shared enthusiasm. These works, then, are a sharing of one man's affection for vintage radio.

Olde Tyme Radio Co.

2445 LYTTONSVILLE RD.

SILVER SPRING, MD.-20910

(301) 585-8776